City of North Miami Beach, Florida

Community Development Department

Planning and Zoning Board Agenda

Wednesday, October 26, 2016 - 6:00 P.M.
City Council Chambers, 2nd Floor City Hall,
17011 N.E. 19 Avenue, North Miami Beach, Florida 33162

1. **Pledge of Allegiance.**

2. **Roll Call of Board Members:**
   Jarret L. Gross
   Julian Kriesberg, Vice Chair
   Joseph Litowich
   Hector Marrero
   Evan Piper, Chairperson
   Saul Smukler
   Laurence J. Thompson

3. **Approval of Minutes - Meeting of Monday, September 12, 2016.**

4. ***Public Hearing Procedures***
   - ***Swearing In of Interested Parties.***
   - ***Sign In of Interested Parties:*** *Those who wish to address the Board during the public hearing portion must legibly record their name and address on the sign-in sheet with the item(s) they wish to address.*
   - ***Meeting Procedures:*** *The following format will be utilized; however, the Chairperson in special circumstances may impose variations.*
     - *Identification of Agenda items by Community Development Director*
     - *Jennings Disclosures*
     - *Applicant/Agent presentation*
     - *Community Development Staff Recommendation*
     - *Public comments (2-3 minute limitations may be placed due to number of speakers)*
     - *Public comment closes*
     - *Board discussion*
     - *Motion and Vote (as applicable)*

5. **Old Business**

   None.

6. New Business

Item 16-20 – Sign Variances for Valente Brothers Self-Defense located at 16348 NE 26th AVE, Tax Folio #07-2215-001-0060 – by 16348 NE 26TH AVENUE LLC:
A RESOLUTION OF THE MAYOR AND CITY COUNCIL OF THE CITY OF NORTH MIAMI BEACH, FLORIDA, GRANTING VARIANCES IN ACCORDANCE WITH SECTION 24-158 "VARIANCE STANDARDS" FROM THE ZONING AND LAND DEVELOPMENT CODE, CHAPTER XXIV, ARTICLE XIII, ENTITLED "SIGNS," SPECIFICALLY GRANTING VARIANCES, FROM SECTION 24-147.1(G) TO PERMIT A SECOND WALL SIGN, WHERE ONLY ONE WALL SIGN IS ALLOWED, AND TO PERMIT AN APPROXIMATELY 145 SQUARE FOOT WALL SIGN WHERE AN APPROXIMATELY 112 SQUARE FOOT SIGN IS ALLOWED, AND GRANTING A VARIANCE FROM 24-149.2(2) TO PERMIT A WALL SIGN ON THE SOUTH FAÇADE, WHERE A SIGN IS ONLY ALLOWED ON THE EAST FAÇADE, ON PROPERTY LOCATED AT 16348 NE 26 AVENUE, NORTH MIAMI BEACH, FLORIDA.

Item 16-21 – Text Amendment to the Zoning & Land Development Code - Medical Marijuana Ordinance – by City of North Miami Beach:
AN ORDINANCE OF THE MAYOR AND CITY COUNCIL AMENDING THE CODE OF THE ORDINANCES OF THE CITY OF NORTH MIAMI BEACH, FLORIDA BY AMENDING CHAPTER XXIV "NORTH MIAMI BEACH ZONING AND LAND DEVELOPMENT CODE", ARTICLE II "DEFINITIONS", SECTION 24-22 "DEFINITIONS", AND ARTICLE V, "ZONING USE DISTRICTS", SECTION 24-52 "B-2 GENERAL BUSINESS DISTRICT", SECTION 24-54 B-4 "DISTRIBUTION BUSINESS AND LIGHT INDUSTRIAL DISTRICT", AND SECTION 24-54.1 "B-5 DISTRIBUTION BUSINESS AND MEDIUM INDUSTRIAL DISTRICT" TO PROVIDE THE CONDITIONS AND REQUIREMENTS FOR THE USE OF MEDICAL MARIJUANA DISPENSARIES, AND MEDICAL MARIJUANA TREATMENT CENTERS; PROVIDING FOR THE REPEAL OF ALL ORDINANCES OR PARTS OF ORDINANCES IN CONFLICT THEREWITH; PROVIDING FOR SEVERABILITY; CODIFICATION; AND FOR AN EFFECTIVE DATE.

Item 16-22 – Text Amendment to the Zoning & Land Development Code – Fence Height Ordinance – by City of North Miami Beach:
AN ORDINANCE OF THE MAYOR AND CITY COUNCIL AMENDING CHAPTER XXIV, OF THE CODE OF THE ORDINANCES OF THE CITY OF NORTH MIAMI BEACH, FLORIDA BY AMENDING ARTICLE VIII, "SUPPLEMENTAL REGULATIONS" SECTION 24-80 "FENCES, WALLS AND HEDGES", TO SPECIFY THAT HEIGHTS OF ELEVATION OF WALLS OR FENCES SHALL BE MEASURED FROM ADJACENT GRADE; PROVIDING FOR THE REPEAL OF ALL ORDINANCES OR PARTS OF ORDINANCES IN CONFLICT THEREWITH; PROVIDING FOR SEVERABILITY; CODIFICATION; AND FOR AN EFFECTIVE DATE.

7. Public/Citizen Comments

8. Adjournment.

Next Meeting: November 14, 2016

All interested parties are invited to attend and participate in the Public Hearing(s). The items are on file and available for examination at the Community Development Department, 17050 N.E. 19 Avenue, North Miami Beach, Florida 33162-3194, Monday through Friday 8:00AM-5:00PM. Questions and written comments can be directed via email to nmbcomdev@citynmb.com, FAX - 305.957.3517, or mail to the above address or by calling 305.948.2966. Upon recommendation by the Board, the items/ applications will be scheduled for City Council consideration.

Any person who receives compensation, remuneration or expenses for conducting lobbying activities is required to register as a Lobbyist with the City Clerk prior to engaging in lobbying activities before City Boards, Committees, or the City Council.

Should any person desire to appeal any decision of the Planning and Zoning Board with respect to any matter to be considered at this meeting, that person must insure that a verbatim record of the proceedings is made, including all testimony and evidence upon which any appeal may be based (See Florida Statues 286.0105).

In accordance with the American with Disabilities Act, persons needing special accommodations to participate in this proceeding should contact the office of the City Clerk no later than two (2) days prior to the proceeding at 305.787.6001. For assistance, if hearing impaired, please call the TDD line at 305.948.2909 for assistance.

Minutes from September 12, 2016

City of North Miami Beach, Florida
COMMUNITY DEVELOPMENT DEPARTMENT

PLANNING & ZONING BOARD MEETING
Monday, September 12, 2016

Attendees:

Board Members:
Evan Piper, Chair
Julian Kreisberg, Vice Chair
Joseph Litowich
Laurence Thompson

Board Members Absent:
Jarret Gross
Hector Marrero
Saul Smukler

Staff:
Richard Lorber, Community Development Dir.
Justin Proffitt, Planning & Zoning Manager
Jose Smith, City Attorney
Sarah Johnston, Assistant City Attorney
Shanesa Mykoo,– Assistant Planner
Lisa Edmondson/Prototype, Inc., Recording Clerk

1. Pledge of Allegiance

Chair Piper called the meeting to order at 6:20 p.m. The Pledge of Allegiance was recited.

2. Roll Call of Board Members

Roll was called. It was noted that a quorum was present.

3. Approval of Minutes - Meeting of Monday, June 13, 2016

Motion made by Vice Chair Kreisberg, seconded by Mr. LitowicH, to approve the minutes of the August 8, 2016, meeting. In a voice vote, the motion passed unanimously.

4. Public Hearing Procedures

Chair Piper administered the oath for any members of the public wishing to speak during the meeting. He instructed them to sign in as well.

5. Old Business

Item 16-014: Conditional Use and Site Plan Approval – Levels Recovery Center by VKJJ Alliance, LLC. – 951 NE 167 Street, North Miami Beach, Florida:

A RESOLUTION OF THE MAYOR AND CITY COUNCIL OF THE CITY OF NORTH MIAMI BEACH, FLORIDA, GRANTING CONDITIONAL USE AND SITE PLAN APPROVAL, IN ACCORDANCE WITH SECTION 24-52(C)(6) AND 24-52(C)(12) OF THE NORTH MIAMI BEACH CODE OF ORDINANCES FOR THE CONSTRUCTION AND OPERATION OF A PROPOSED RESIDENTIAL DETOXIFICATION AND DRUG AND ALCOHOL REHABILITATION SERVICE IN AN EXISTING OFFICE BUILDING; AS PROPOSED, IN THE B-2, GENERAL BUSINESS DISTRICT AND LOCATED AT 951 NE 167 STREET, NORTH MIAMI BEACH, FLORIDA.

Mr. Proffitt announced the case and gave a summary of the Staff Report which included a slide presentation, aerial, location, and zoning maps. In a summary of the changes made since the last meeting, it was noted that the site plan has been revised. Changes include:

- Access for solid waste vehicles resolved, changing site plan, approval by Waste Management
- Revised letter of intent including changes to circulation of solid waste vehicles on property, security procedures, client intake procedures, and laundry
- More landscaping and a grassy area, buffering the residential properties
- Better identification of the Nurse Station and Drug Storage

Mr. Proffitt compared the previous site plan to the currently proposed one:

- More green space between the parking lot and the residential area, shade trees of various species
- In the underground garage, the driveway as well as some of the parking spaces will be removed to accommodate the solid waste vehicle. The ramp will be lowered to allow the truck to go through
- First floor plan consists of kitchen facilities, office spaces, medical offices, meeting rooms, two patient bedrooms, and security offices
- Second floor plan consists of the rest of the residential facility portion, TV room, gym, storage, medical offices, and nurses' stations
- Proposed color rendering of the property

Major proposed improvements to the plan include:

- 24-hour Security Plan, camera locations, etc.
- Reduced signage
- No multiple tenants in the building
- Six foot privacy wall surrounding entire rear portion of property
- Significant amount of landscaping
- Less traffic generation as patients will not have own cars

The Staff has reviewed the site plan and finds:

- In compliance with Zoning & Development Code
- Conditional use criteria have been met
- Traffic statement by the applicant reviewed
- Concurrency review adequate according to per City's Engineer and traffic consultant

Accordingly, the Conditional Use and Site Plan is recommended for approval, subject to Conditions of Approval in the Resolution (to follow), and additional conditions for revisions to the site plan. Details to be clarified on the site plan package to be addressed between the Planning & Zoning Board and the City Council:

- Condition #8 (page 3): The facility shall obtain accreditation with Joint Commission of Accreditation Health Care Organization within the first year of operation and shall maintain accurate accreditation in good standing.
- Condition #30 (page 5)
- Condition #31 (page 5)
- Condition #34 (page 6)

Mr. Lorber stated that they had received approximately 144 email messages with regard to this item, which Mr. Smith indicated should be included in the record.

Jennings disclosures were then announced with none of the Board Members having had contact with interested persons, other than Mr. Litowich who had had email contact from members of the Jewish Community.

Applicant Jennifer Levin addressed the changes to the Letter of Intent as submitted in the Supplement. Ms. Levin answered various questions submitted by citizens at the last meeting, including:

- Conditional uses as requested
- Garbage truck access
- Measures to accomplish landscaping
- Administration of medications, drug storage areas locked, security camera monitoring
- Re: ongoing viability of facility without referrals by criminal justice system
    - No shortage of clients anticipated
    - Already sufficient referrals from holistic recovery centers
    - Lateral referrals from out-of-state
    - Operating almost at capacity from inception
- Re: client discharge at option of client
    - All clients are volunteer, none from criminal justice system or court-ordered
    - Close observation by certified staff trained to determine danger, if any
    - Client can be hospitalized under Baker Act if meets criteria
    - Rare event of discharge against medical advice, client required to exit via limo
- Licensure of facility explained, applicant will meet all State of Florida licensing requirements by DCF
- Kitchen solid waste, periodically and daily disposed into trash dumpster
- Revisions to the site plan continue to reflect appropriate security and privacy for this closed-door facility. General public will not have access. Clients will not be receiving any visitors. Only thoroughly screened clients and authorized employees allowed inside.
- Security
    - Guards rove perimeter of facility 24/7/365, also benefitting surrounding properties
    - Camera will be able to reach outside perimeter of facility, in some instances capturing any crimes outside the facility
    - Completely walled in and gated.
    - All clients brought to and leave via transportation provided by facility. No one will be driving in or out.
    - Clients accompanied by staff members whenever leaving the building, never left alone
    - Will not harbor or attract criminal element from outside
    - Impact on traffic less than currently, as confirmed by traffic study reviewed by City
    - Outdoor area of building to be modified and beautified, and interior completely remodeled at approximate cost of $10 million
    - Facility will grant at least $1 million annually in full/partial scholarships, given preference to North Miami Beach residents
    - Applicant will be involved in anticrime activities overseen by NMB Police Department, including PACT, Club Law & Order, Neighborhood Crime Watch, and Citizens Police Academy

- Willing to offer security systems to contiguous properties

Ms. Levine acknowledged the controversy and concern about crime and drug addicts, citing evidence, data, and studies as support, and concluding that drug treatment centers do not impact communities any more than any other commercial businesses. Finally, the conditional uses request is clearly permitted within the B2 General Business District, pursuant to Section 24-52 of the Code. Ms. Levine stated that the Applicant has satisfied all standards for the awarding of the conditional use, and Applicant has agreed to additional limitations requested by Staff.

Before opening the floor for comments, Chair Piper reminded the audience that the decision to be made is not binding; this is an advisory board to the City Council. Chair Piper then asked for comments from the Board.

Mr. Kreisberg asked if the Legal Staff could give the Board the criteria for making a decision on a conditional use project, especially one that has already been somewhat approved. Mr. Smith recognized that there is significant opposition from the neighborhood before stating this is not a popularity contest, nor a poll, or a referendum. The decision that the Board is about to make has to comport with Federal law and City code, not based on fear, prejudice, or discrimination. The Americans with Disabilities and Fair Housing Acts prohibit discrimination based on a disability, and the courts have consistently ruled that drug and alcohol addictions are by definition physical and mental impairments. That said, the applicant is obligated to comply with every one of the following conditions. Failure to keep these points in mind will expose each individual of the Board and the City to potential legal liability.

Ms. Johnston stated that the conditional use standards are in the City Code, Sect 24-172(b), and pages 6 and 7 of the Staff Report. Based on substantial and competent evidence to be heard, there are eight criteria to be met. Such evidence would include verified pictures, fact-based citizen testimony, official town records (city code, ordinances, staff report), expert testimony, application materials from applicant, and any additional staff reports. Not substantial evidence would be lay testimony not based upon fact, alleged violations of codes or laws, and subjective preferences. She encouraged to Board to ask questions of legal counsel as to the determination of substantial competent evidence or lay testimony. Discussion followed as to broader inclusions of discrimination such as racial or religious bias. Mr. Smith added that the two conditions that can be considered are compatibility and property values.

Mr. Litowich asked about defense of Board Members, if needed, as they serve free of charge for the City. Mr. Smith assured that based on whatever decision is made, the Board Members have immunity, and in the event they don't have immunity, they will be defended.

The applicants asked to finish their presentation. Architect Don McLeod guided the Board through the design in the packet showing current and proposed elevation of the exterior; traffic circulation, including security features; accommodations in the rooms; north parking lot; garbage truck ingress/egress. The main front door will be locked, no entrance, but will be a fire exit.

Mr. Litowich asked about the Baker Act, how that affects some who wishes to leave the facility, if it is necessary that a relative controls the Baker Act clauses. Applicant Adam Adler said that the answer is no, a licensed therapist/clinician or a doctor is capable of "Baker Act-ing" clients. Mr. Litowich asked if this was a money-making venture, to which Mr. Adler said it is for-profit. Mr.

Litowich commented that if the company is investing $10 million in this location, were there no other locations that were just as suitable. He made further comments about the known use of drugs in a building on the corner, asking if that wasn't a concern. Mr. Adler said they haven't had that kind of problem, but would call the police if necessary. Mr. Litowich asked to reserve further comments until later.

Roland Faith, owner of the property, gave a statement on his reasoning behind the purchase of the Olympic Building for use as a detox center. He reminded the audience of the existing conditions in the neighborhood and that the hope was to bring investment into the community by way of esthetics and a reduction of traffic; that this was a project to embrace and not fear; and that they will be working with the police to make sure this will be an area that is safe to work and live for all people.

Chair Piper opened the floor to public comment, stressing the need for new content, and not repetition of those who have already testified.

- Before beginning testimony, Karen Harrold handed in petitions from 400 people, as well as documentation to become public record. Ms. Harrold spoke concerning pedestrian traffic, traffic studies, congestion; MPO implementation plan; bicycle safety analysis, trails and designations; lack of sidewalks necessities; delivery of food, linens, etc.; community safety; decrease in property values; CRA redevelopment plan; over-burdening of existing infrastructure; 911 calls.
- Sheldon Zipkin spoke about traffic, the short roadway, delivery times, and shift changes. When challenged, Mr. Lorber said the proposed use yields less traffic than the current use. To verify this, information was sent to a planning consultant, and then to a traffic engineering department of another firm, and they concur.
- Chaim Breier commented regarding the generic traffic model, that the block in question is not a generic block. The intersection makes no sense, traffic backs up to 10th Avenue. Community is not opposed to detox or rehab, they are not biased or against people with disabilities, but this location is not a fit, no room for industrial dropoff. Safety is a concern, within three schools, property values, and growth of the neighborhood.
- Mordechai Breier looks at the presentation and sees a lot of promises and no guarantees. There is a lack of oversight, and he asked that all of the "mays" in the proposed plan become "shalls." Is a semi-commercial zone being turned into an industrial zone?
- Gilbert Druin wondered if detox/rehab facilities of this nature are located next to three schools anywhere else in this country. He feels there will be a negative impact on people considering moving to the neighborhood as regards safety and security issues.
- Shulamis Tyberg commented regarding the traffic practices of those attending the Jewish private school. There are no buses, only carpools, with four different pick-up times for the various grade levels. Ms. Tyberg objects to the generic traffic study as it does not apply to this community, also voicing concerns about drop-outs from the detox center.
- Jerald Epstein spoke against the project. Mr. Epstein asked several questions, which were deferred to be addressed in the Applicant's rebuttal.
- Moishe Schwartz spoke against the noise, the trash, and medical waste. Also, that elderly people in his building are afraid of the possibility of strangers in their building.
- Yaffa Eisner said that her fear isn't prejudice, but still, they are afraid. For instance, they can be seen at the pool by people in that building. She is afraid people will get out. Mr.

Smith commented that he never said fear was not criteria for the Board to consider, but that "irrational fear" is what the Federal cases will not consider.

- Dvorah Wechsler said she moved to North Miami Beach three years ago because it is a warm, growing, cohesive community. Property values have risen, but she feels they will decline. She cited a study from Virginia that there is an 8% decrease in property values when this type of facility is located in the neighborhood, even higher (17%) for treatment of opiate addiction.
- David Perkins spoke as a representative of the board of the condo association of the 909 building opposing the application for the reasons already stated. Mr. Perkins has some familiarity with drug and alcohol rehabilitation facilities, and states the promise of security should be taken with a big grain of salt. There definitely is a need for such a facility, but there are other, more appropriate locations.
- Jay Berger spoke as president/representative of New Land Gardens condo association, primarily citing decline of property values as their concerns.
- Yahouda Kaploun stated he has been a chaplain with the University of Miami, particularly in the drug addiction area. The study previously mentioned also speaks about the devaluation of property. The study speaks of landscaping, but not of the safety of children, citing the frequency of escapes from detox facilities.
- Eddie Burstyn thanked the City for the fantastic job done by the police department and the various public works. He stated that fear is a real perception, the people need to feel safe and the children need to be safe. The community is looking to the Board to be leaders.
- Aaron Singer (Rabbi) stated he and a number of other people put together a beautiful building from community money. People from all over have come to the area, but now because of the fear of Zika, rentals are empty and people are losing money. Property values will go down because of projects like this and people will move elsewhere.
- Zeev Fraser was concerned about traffic congestion and crime issues he has seen first-hand. He has worked with Rabbi Singer to build a unique Jewish community. Mr. Fraser has a business in North Miami Beach and is an employer. He thinks further consideration is needed, asks that the Board's decision not be made tonight.
- Alan Franklin voiced concern about the (alleged) relapse rate (40-60%) for this type of recovery program. He had done online research and found no nearby facilities, closest is Ft. Lauderdale. Also concerned about security and the lack of guarantees if the facility "falls apart."
- Eli Brass spoke about the security cameras, feels they only help in retrospect. Also mentioned the promise to offer cameras to neighbors, which must mean there is actually a real risk of something happening.
- Allison Sarbin spoke of the existing petty crime rate and drug dealing in some of the neighborhood apartments and nearby areas. Ms. Sarbin wonders if there is a risk of patients leaving the facility, getting drugs, and reentering the facility. She also asks if the owners have thought of addressing the community about what may be the best fit for that building instead of a detox center.
- Betty Bursztin voiced her opposition, agrees there is a fear factor, especially for safety of children. Ms. Bursztin also addressed the parking issue, wonders if 30 parking spaces is enough for the employees, will overflow be parking on the street.
- Robert Brass stated the article with the Johns Hopkins study cited by applicant's attorney is misleading. That study was done in Baltimore where the crime situation is very different,

along with other factors that do not really apply here. Mr. Brass brought maps of schools in the local vicinity.

- Miriam Bensinger, property owner and business person, understands people wanting to use their property to make a profit, nothing wrong with that. The compatibility issue concerns Ms. Bensinger, stating this is not a permitted use, but a conditional use, and may or may not be appropriate. Ms. Bensinger asked the Board to keep these things in mind.
- Dan Goodman spoke about the issue of discrimination against drug addicts at the federal level, and that is not what is going here. This is an objection to a profit-making operation that seeks to bring such people into the community, changing the dynamic of a neighborhood that enjoys foot traffic and community involvement.
- Rabbi Mordechai Palgon said he is flabbergasted this matter has gotten this far. He has spoken with the mayor, chief of police, and city council people about better community, better safety. Rabbi Palgon stressed that this is not a discriminatory fear, but is reality. The number of people who appeared at this meeting is evidence of the community's involvement, and it is the Board's responsibility to protect this community.
- Jack Solomon voiced his opinion that this matter needs to be put in perspective, this will be a large facility housing a lot of people. Besides the residents, how many staff and security people. This facility will destroy the community.

Chair Piper then closed the floor to public comment.

Before rebuttal and staff comments, Chair Piper summarized, for the record, the public comments as vehicle congestion, traffic issues, shifting deliveries based on traffic, concern the applicant will not be able to deliver on promises, guarantees if promises cannot be met, concerns about a drug rehab near schools, lowering of property values and neighborhood desirability, how medical wastes will be handled, specific safety issues, effectiveness of cameras, addressing existing crime.

As rebuttals to public comments, Mr. Adler noted:

- The public is uninformed and uneducated about who the clients actually are, referring to them as criminals, etc. Over the years, Mr. Adler had treated athletes, celebrities, doctors, attorneys, businessmen, even people from the Orthodox Jewish community. These are not people who will break out and commit crimes.
- The statement that the facility runs outpatient programs is not entirely correct; it has many levels of care, this facility will have primarily residential level of care; then partial hospitalization, intensive outpatient, outpatient, and outpatient with detox. The comprehensive programs offered have been very successful.
- Regarding the Baltimore crime study not being compatible, Mr. Adler went to find an extreme example to help educate the public on the effectiveness of the program in the community, and in that aspect it is even more relevant.
- The issues with cameras and security and risks, Mr. Adler agrees that the area is already dangerous with drug dealing and crime, and that is the reason for the cameras and high level of security, not the patients within the facility.
- There will be a certified medical waste company to dispose of these materials.
- Will continue to work with the Police Department and place lighting and cameras for surrounding properties in the most relevant areas, making sure that staff and patients are safe.

- The building has underground parking which will be used by the majority of staff members. Only when the underground is full will the exterior parking spaces be used. Clients come in approximately two to three admissions a day, so traffic is significantly less than for the current use. Night time staff is less than day time staff, and only go in and out when coming to or leaving work.
- There are deliveries currently at many different times because of many occupants. The facility is structured for deliveries at a set time, food deliveries several times a week, but never at night.
- Maximum capacity for clientele is 60. The kitchens are onsite. Other deliveries are very minimal.
- There is no visitation allowed.
- Clients do not run away and jump over walls. In this level of care, they are much less likely to leave the facility. Out of thousands of clients, have never had one incident of crime, one single violent incident, or any police reports. None of the concerns voiced have ever happened at the Applicant's current facility, or a prior facility in Hollywood.
- Regarding relapse rate, there is a stigma about what goes on with detox facilities due to being uneducated. Mr. Adler shared these concerns before he got into the business. If the community understood the operation of this type of facility, they would actually want the facility there. Most of the clients come from out of state, due to a need for anonymity in their communities.

Mr. Lorber asked about Condition #30 concerning deliveries, and read out loud that deliveries must occur between the hours of 7:00 a.m. and 10:00 p.m. One of the public comments was that this is way too late. Mr. Lorber suggested perhaps 8:00 a.m. to 6:00 p.m. Mr. Adler said he did not think the change in delivery times would be a problem.

Regarding discharge protocol, Mr. Adler explained that all incoming clients are set up with a discharge plan, recommending patients go through the entire gamut of treatment. If client is not adamant about not following the treatment, they are transported to a safe location such as an airport or train to go home.

Mr. Litowich asked about the quoted study, if anything was left out about devaluation of property. Ms. Levin said that it was not in the article cited, but the complete citation was given when the presentation was started and there was nothing in it that addressed property values. Ms. Levin is not aware of any study that does address that issue. In addition, Ms. Levin addressed the deliveries question, stating that the swale in front of the building will be eliminated in favor of pervious pavement where trucks can pull into, off of the street, in addition to using the ramped area that is being changed. Mr. McLeod explained the site plans regarding this matter.

Mr. Thompson wanted some elaboration on the definition of conditional use and permitted use. Mr. Lorber read the definition, "Conditional use is defined as a use which, when specifically listed as such within the use district regulations, may be permitted with certain stipulated conditions that will serve to assure that said use will assimilate properly into its surrounding neighborhood without deleterious effects." The key word is "conditions." Some discussion ensued about the use of the word "may," but Mr. Smith returned the attention to secondary detrimental effects which cannot be addressed or cured or fixed by the conditions that are imposed by the planning director. Mr. Thompson wondered what conditions would not be granted. Loss of property values and not

compatible with surrounding neighborhood would be two conditions. Mr. Thompson said that more due diligence is needed, and he is not ready to make a decision.

Ms. Levin acknowledged Ms. Johnston's willingness to discuss and make a modification to Condition 34 in the proposed resolution. Given all that has been said in opposition, in the event the facility is approved, Ms. Levin is concerned that people will make false accusations about things that aren't happening at the facility that could put the facility and the property owner in jeopardy with the City. Condition 34 makes certain that if someone comes with a complaint, it must be substantiated. Ms. Johnston interjected that this is governed by the Code Compliance Department, and there is an extensive process codified and governed by State Statutes with multiple safeguards in place to govern this.

Ms. Johnston clarified the comment made on zoning, there is no change in zoning, no rezoning, to be voted on at this meeting. Also, the City's Police and Code Compliance Departments will oversee compliance issues, and the City's recourse is "revocation of this use," which means the City Council maintains jurisdiction and can call the applicant back for these violations and revoke the ability to operate for that use at the facility.

Chair Piper reviewed notes on the issues expressed by public comments, and that they all had been addressed.

Mr. Thompson stated that, from what he had heard, he doesn't feel this meets the criteria for condition of use.

Chair Piper said the Board has heard the City's recommendation on this item, and asked if the Applicant can accept all of the conditions. Mr. Adler said yes.

Mr. Kreisberg acknowledged the importance of this issue, evidenced by the people in attendance. With all the work done by Staff and Legal Counsel, it is a shame that three Board Members didn't attend, which puts a burden on the rest of the Board. Mr. Kreisberg stated the Board Members are residents of the City, some live in the neighborhood, some don't. Feelings should not be taken into account; irrational fears cannot color the vote, which is only a recommendation to the City Council. A recommendation to the citizens is that they get the facts and hone their arguments before coming before the Council. The Board has a narrow determination. It is already the law of the city that B2 Zoning can have this type of facility, and the Board can only look to see if the conditions are met. When it comes to property values, without any facts, feelings on these issues cannot be supported in a court of law. Mr. Kreisberg voiced his opinion that, if it comes to pass, there will be a building so much better than the current one, the area will be look nicer, and be safer, and down the road will be an enhancement. His vote will not be on whether or not property values are improved, but on what his responsibility is as far as meeting the criteria of conditional use.

Chair Piper commented on someone mentioning the NIMBY principle, Not In My Back Yard. The tendency is to reject new changes in one's neighborhood, but sometimes they can be a positive. If this project doesn't happen, something else is going to happen, and that next project may be liked even less. Members of the Board are held to a certain standard of what criteria can and cannot be used to make their decisions. No matter what happens at this meeting, what really matters is at the City Council.

Motion was made by Mr. Kreisberg, seconded by Chair Piper, to approve with all conditions stated and the delivery times changed from 7:00 a.m. - 10: p.m. to 7:00 a.m. – 6:00 p.m. A roll call vote was taken, as follows. As the vote was two to two, the Board will neither recommend nor deny Item 16-014 to the Council.

Chair Evan Piper	**Yes**
Vice Chair Julian Kreisberg	**Yes**
Joseph Litowich	**No**
Laurence Thompson	**No**
Saul Smukler	**Absent**
Jarret Gross	**Absent**
Hector Marrero	**Absent**

6. New Business

Item 16-015 Text Amendments

Mr. Lorber said the item is a zoning text amendment attempting to address several ongoing problems with code compliance with single-family driveways and swales.

- Composition of driveways for three- and four-family homes must be concrete, asphalt, or pavers, but no such requirement exists for single-family homes. The recommendations are that all new construction and all upgrades have concrete/asphalt/pavers, and existing gravel/rocks be maintained and prevented from going into the street.
- Violations on swale areas include the swale being ripped up, without grass, overused, extensive parking overnight. Code is clear, swale parking is permitted. Constant parking will kill the grass. It is the responsibility of the homeowner to maintain the swale adjacent to their home. Proposal is to beef up the code, state exactly what the swale can be used for, what the requirements are to maintain it, and discourage continual parking.
- Limited preferential usage to homeowner for parking on swales in front of residences (as done in City of Miami Springs), also permits others utilize swale, or can request that others do not park there. City would like to try this, working with Code Compliance and Police to work with homeowners.
- Setback encroachments for storage structures and utility sheds. Usually not a problem, unless it is a corner lot where sheds can be seen from the street. Would like to change code to include that storage structures visible from adjacent public street be screened by appropriate fencing or landscaping.

Chair Piper was concerned about swale parking items, does not seem right, could open up some issues, seems to give a perceived "ownership" or control of swales. Discussion followed including definition of limited preferential usage, difficult neighbors making complaints, use of concrete buttons, scoff-laws, and what a balance could be. Mr. Lorber added that the proposed ordinance comes with a more robust set of guidelines for allowing landscaping with approval from Department of Public works. Mr. Thompson spoke of each neighborhood being unique, not one fix for all, and be considered on a case-by-case basis, not just for parking but for driveways and setbacks.

Chair Piper asked what the real issues might be, this must be to remedy something. Mr. Lorber said it is to address the number of Code Compliance violations for swales and driveway, and the lack of clarity in the regulations to remedy the situations. Something is needed to go before Public Works to have approved changes in the composition of the swales, to clarify and improve swales and driveways.

Mr. Litowich agreed that swales need to be maintained, and rounded buttons would be okay. However, the pointed/pyramid buttons should be prohibited. Mr. Litowich likes a graveled driveway, but it is almost impossible to maintain, keeping rocks out of the road, grass, etc. Mr. Lorber listed materials that would be prohibited, such a railroad ties and pyramid concrete, and materials and stipulations for other materials. As far as the shed ordinance, Mr. Litowich agreed with the changes.

Chair Piper suggested step one would be to revisit these items and bring them back. Mr. Kreisberg said having a fuller board would give more input as well.

Chair Piper opened the floor to public comment.

- Sandy Rosenberg lives on a busy street that is technically a highway, even though it is small and narrow. Cars do not stop for pedestrians. Mr. Rosenberg has an issue with neighbor having too many cars and using his swale. He has spent $500 to fix it, and he does not park there himself. He put grass in and moved small rocks to protect it while it grows. He knows he will be in violation for that, but doesn't know what else to do.
    - Discussion followed about use of trees, the necessary setback, and limited options on that stretch of highway. Mr. Lorber wondered if "grass crete" might be a good solution for parking on swale areas. Mr. Litowich would like to see other options and try not to legislate so much, especially for people with economic difficulties.
- Marshall Moss said he is legally obligated to maintain the swales, but has had people drive over his sprinkler system causing added expense and time. Property owners should have some level of control and authority over swale, whatever is decided. Neighbors have almost come to blows with arguments over this. Mr. Moss gave various examples of the different issues he has seen.

Chair Piper wondered if someone has spoken to Miami Springs to see how their ordinance is working out. Mr. Proffitt said that Oakland Park had passed a similar ordinance, it worked just fine, and the enforceable entity was the Police Department, issuing traffic violations for illegal parking in the swales. Ms. Johnston interjected that in some cities the Police Department is authorized to issue code violations, acting in the same capacity as the Code Officers. Some discussion followed on who generates the complaints, the types of perceived violations, etc.

- Hillel Hellenger stated that he had received a notice to replace the grass on the swale, but he found nothing in the code that said the swale had to be grass.
    - Mr. Lorber said this is why the code needs to be clarified, adding that another section of the code is very clear that "the swale area is defined and shall be a grassy area." Mr. Hellenger was encouraged to speak with Code Enforcement to see if he can work something out, because the issue is not this Board's job.

Motion was made by Mr. Kreisberg, seconded by Mr. Thompson, to table Item 15-015 to the next Planning and Zoning Board meeting and to separate it into three ordinances. In a roll call vote, the motion passed unanimously (4-0).

Chair Evan Piper	**Yes**
Vice Chair Julian Kreisberg	**Yes**
Joseph Litowich	**Yes**
Laurence Thompson	**Yes**
Saul Smukler	**Absent**
Jarret Gross	**Absent**
Hector Marrero	**Absent**

Next meeting: October 10, 2016.

7. Public/Citizen Comments - None

8. Adjournment

Upon motion duly made and seconded, the meeting was adjourned at 10:12 p.m.

[Minutes prepared by M. Moore, Prototype, Inc.]

Item 16-20

Sign Variances

City of North Miami Beach, Florida
COMMUNITY DEVELOPMENT DEPARTMENT

PLANNING AND ZONING BOARD
STAFF REPORT

TO:	**Planning & Zoning Board Members**
VIA:	**Richard Lorber, Community Development Director**
FROM:	**Justin Proffitt, AICP, Planning and Zoning Manager**
DATE:	**October 26, 2016**
RE:	**16348 NE 26 Avenue, Valente Brothers Self Defense Sign Variances**

ITEM # 16-20	**Valente Brothers Self Defense**
OWNER OF PROPERTY	16348 NE 26TH AVENUE, LLC.
ADDRESS OF PROPERTY	16348 NE 26 AVE
FOLIO NUMBER	07-2215-001-0060
LEGAL DESCRIPTION	LOT 2 IN BLOCK 2 OF "EASTERN SHORES", ACCORDING TO THE PLAT THEREOF, RECORDED IN PLAT BOOK 65, PAGE 28, OF THE PUBLIC RECORDS OF MIAMI-DADE COUNTY, FLORIDA. CONTAINING 19,330 SQ.FT. OR 0.4437 ACRES, MORE OR LESS.
EXISTING ZONING	B-2, GENERAL BUSINESS DISTRICT
EXISTING LAND USE	HEALTH STUDIO/SCHOOL
FUTURE LAND USE DESIGNATION	BUSINESS

BACKGROUND:

The applicant, 16348 NE 26TH AVENUE, LLC., represented by Felix Lasarte, requests three sign variances:

1. Variance from Section 24-147.1(G)(1) to permit a second wall sign where only one wall sign is allowed; and
2. Variance from Section 24-147.1(G)(1) to permit an approximately 145 square foot second wall sign, where only one approximately 112 square foot wall sign is permitted; and
3. Variance from Section 24-149.2(A)(2) to permit a wall sign on the South façade where a sign is only allowed on the East façade of the building.

ZONING:

The subject property, as well as the properties to the east and south are zoned B-2, General Business District. The land to the west is a part of Greynolds Park East with a zoning designation of Open Space. The properties to the north and are zoned RM-19, Residential Low-Rise Multifamily (Medium Density) District. And the property to the East has a designation of B-2, General Business with an existing place of worship establishment.

THE SITE:
The existing development consists of an 11,165 square foot, two-story building on columns utilized as the headquarters for the Valente Brothers Self Defense School.

COMMUNITY DEVELOPMENT DEPARTMENT ANALYSIS:

Sec. 24-158 ***Sign Variance Review Standards & City Staff Analysis***

In reviewing a sign variance, city staff utilize the sign variance criteria and procedure in Section 24-158 of the Sign Ordinance.

Below is a staff analysis of how this variance application complies with the variance criteria in Section 24-158 of the sign code:

1. *A variance to the provisions and requirements of this article may be granted by the City Council solely for the purposes of allowing signage otherwise not permitted by this article where, due to an extreme hardship which the proponent of the signage had no role of any nature in creating and which cannot, under any reasonable circumstance, be eliminated, no signage which is permitted by this article can possibly serve the communication needs of the proponent or where a variance is needed to avoid what would be through the application of this article a clear infringement of the constitutional rights of the proponent.*

   COMPLIES. In the first section of the sign ordinance (Sec. 24-140) it states, "The purpose of this article is to: encourage the effective use of signs as a means of communication in the City; to maintain and enhance the aesthetics of the environment; and to minimize the possible adverse effect of signs on nearby public and private property."

   The property is located in a B-2, General Business zoning district, but is situated in a predominately residential area that fronts a residential street adjacent to multi-family development. Immediately adjacent to this property are sensitive uses such as residential to the north and east (Lakeview Townhomes) and east across the street a place of worship. Having the frontage of a B-2 zoned parcel on a predominately residential street and surrounded by residential uses can create incompatibilities such as the adverse visual impact of signage.

   Installing the proposed signage in a way that minimizes any adverse visual impact to these sensitive uses and improves the effective use of the sign is a hardship that the applicant

cannot overcome, and had no role in creating based on the requirements in the City's Sign Ordinance, and the existing zoning and development pattern in this neighborhood.

The current sign code requires that the large sign be placed on the east façade and does not permit a sign on the south façade. If the large sign was placed on the east façade it would meet the maximum area dimension of 1.5sf per linear feet of building façade length (max area of 223sf vs 145sf proposed). The sign code also permits a freestanding sign along NE 26th Avenue. If the variances are granted, staff proposes to prohibit any freestanding signage on the property as a condition of approval.

Therefore, the applicant proposes to install the larger wall signage on the south façade of the building facing the direction of NE 163rd/NMB Blvd using the maximum area permitted on the east façade. This will encourage the effective use of the sign as a means of communication. And install the less intrusive logo sign on the east façade of the building, which would minimize the visual impact on the adjacent sensitive uses. The logo sign is smaller at 49sf and placed on the east façade for building identification purposes only, but still much less intrusive to adjacent sensitive uses than the 145sf wall sign.

2. *No variance or other exception shall be allowed under any circumstances for existing nonconforming signage. No variance or other exception shall be allowed to permit a sign or signs which are of a type prohibited by Section 24-143 of this article.*

   COMPLIES. The proposed wall signs are permitted signage in the City's sign ordinance and are not existing nonconforming signage.

COMMUNITY DEVELOPMENT DEPARTMENT RECOMMENDATION:
The Community Development Department recommends **APPROVAL** of the three sign variances subject to the following conditions in the attached draft resolution.

*****PLANNING AND ZONING BOARD VOTE REQUIREMENT TO APPROVE A VARIANCE*****
Pursuant to Article XVIII, Section 106 of the City of North Miami Beach Charter, variances may be allowed by the affirmative vote of two-thirds (2/3) of the members of the planning and zoning board present.

Attachment(s):
- Draft Resolution
- Application
- Letter of Intent
- Sign Plans and Survey

LOCATION AND ZONING MAP

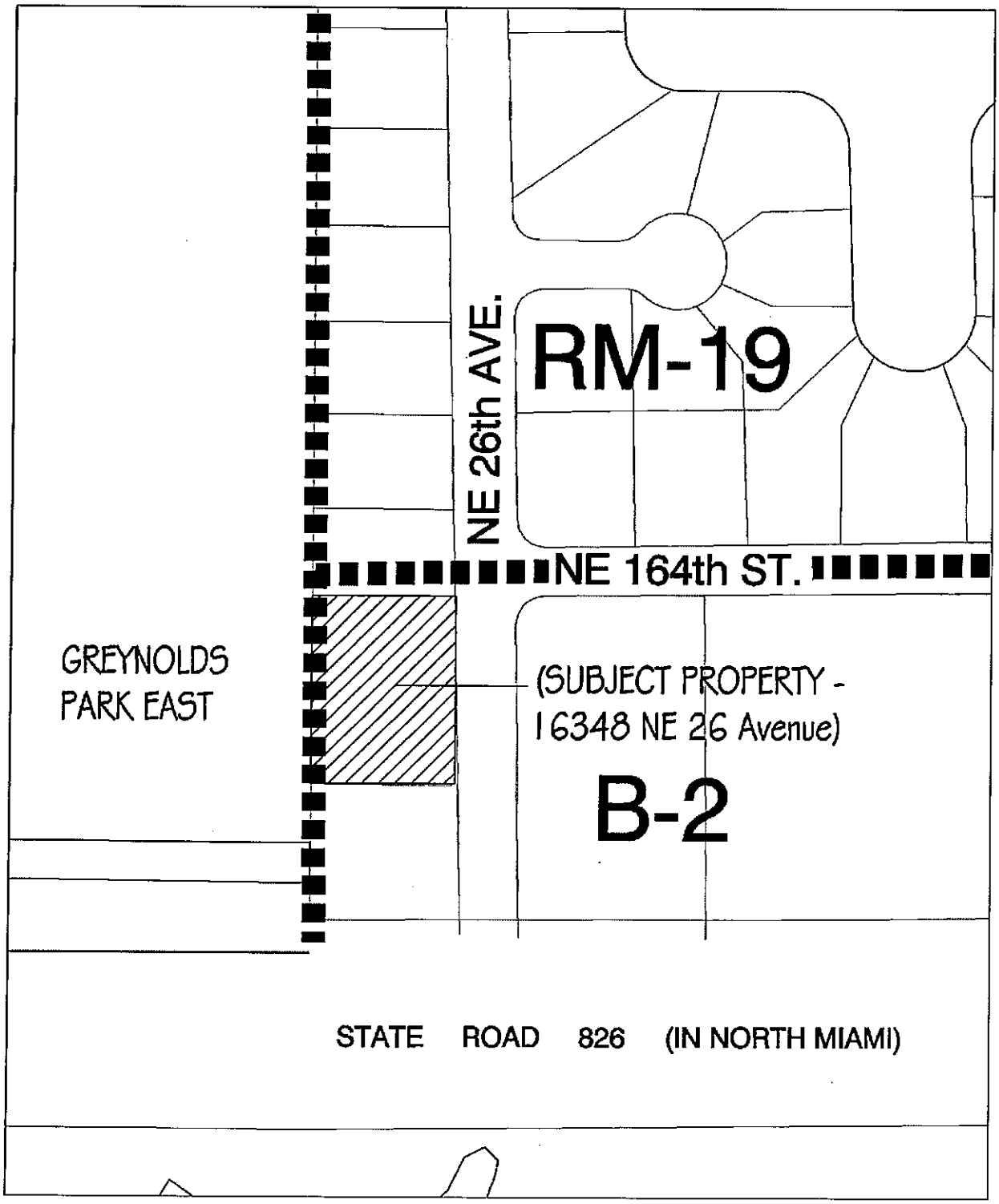

AERIAL LOCATION MAP

PUBLIC HEARING ADVERTISEMENT

10/17/2016

Title:

CITY OF NORTH MIAMI BEACH
NOTICE OF PUBLIC HEARING

Category: Hearings PL

Adnumber: 0000162220H01

DATE/TIME: Wednesday, October 26, 2016, 6:00 P.M.
LOCATION: North Miami Beach City Hall, 2nd Floor, City Council Chambers
17011 NE 19th Avenue, North Miami Beach, FL 33162
PUBLIC NOTICE is hereby given that the City of North Miami Beach Planning and Zoning Board shall hold a public hearing to consider the following items:

1. AN ORDINANCE OF THE MAYOR AND CITY COUNCIL AMENDING THE CODE OF THE ORDINANCES OF THE CITY OF NORTH MIAMI BEACH, FLORIDA BY AMENDING CHAPTER XXIV "NORTH MIAMI BEACH ZONING AND LAND DEVELOPMENT CODE", ARTICLE II "DEFINITIONS", SECTION 24-22 "DEFINITIONS", AND ARTICLE V, "ZONING USE DISTRICTS", SECTION 24-52 "B-2 GENERAL BUSINESS DISTRICT", SECTION 24-54 B-4 "DISTRIBUTION BUSINESS AND LIGHT INDUSTRIAL DISTRICT", AND SECTION 24-54.1 "B-5 DISTRIBUTION BUSINESS AND MEDIUM INDUSTRIAL DISTRICT" TO PROVIDE THE CONDITIONS AND REQUIREMENTS FOR THE USE OF MEDICAL MARIJUANA DISPENSARIES, AND MEDICAL MARIJUANA TREATMENT CENTERS; PROVIDING FOR THE REPEAL OF ALL ORDINANCES OR PARTS OF ORDINANCES IN CONFLICT THEREWITH; PROVIDING FOR SEVERABILITY; CODIFICATION; AND FOR AN EFFECTIVE DATE.

2. AN ORDINANCE OF THE MAYOR AND CITY COUNCIL AMENDING CHAPTER XXIV, OF THE CODE OF THE ORDINANCES OF THE CITY OF NORTH MIAMI BEACH, FLORIDA BY AMENDING ARTICLE VIII, "SUPPLEMENTAL REGULATIONS" SECTION 24-80 "FENCES, WALLS AND HEDGES", TO SPECIFY THAT HEIGHTS OF ELEVATION OF WALLS OR FENCES SHALL BE MEASURED FROM ADJACENT GRADE; PROVIDING FOR THE REPEAL OF ALL ORDINANCES OR PARTS OF ORDI-NANCES IN CONFLICT THEREWITH; PROVIDING FOR SEVER-ABILITY; CODIFICATION; AND FOR AN EFFECTIVE DATE.

3. A RESOLUTION OF THE MAYOR AND CITY COUNCIL OF THE CITY OF NORTH MIAMI BEACH, FLORIDA, GRANTING VARIANCES IN ACCORDANCE WITH SECTION 24-158 "VARIANCE STANDARDS" FROM THE ZONING AND LAND DEVELOP-MENT CODE, CHAPTER XXIV, ARTICLE XIII, ENTITLED "SIGNS," SPECIFICALLY GRANTING VARIANCES, FROM SECTION 24-147.1(G) TO PERMIT A SECOND WALL SIGN, WHERE ONLY ONE WALL SIGN IS ALLOWED, AND TO PERMIT AN APPROXIMATELY 145 SQUARE FOOT WALL SIGN WHERE AN APPROXIMATELY 112 SQUARE FOOT SIGN IS ALLOWED, AND GRANTING A VARIANCE FROM 24-149.2(2) TO PERMIT A WALL SIGN ON THE SOUTH FAÇADE, WHERE A SIGN IS ONLY ALLOWED ON THE EAST FAÇADE, ON PROPERTY LOCATED AT 16348 NE 26 AVENUE, NORTH MIAMI BEACH, FLORIDA.All interested parties are invited to attend and participate in the Public Hearing(s). The items are on file and available for examination at the Community Deve-lopment Department, 17050 N.E. 19 Avenue, North Miami Beach, Florida 33162-2194, Monday through Friday 8:00AM-5:00PM. Questions and written comments can be directed via email to nmbcomdev@ci.nmb.com, FAX - 305.957.3517, or mail to the above address or by calling 305.948.2966. Upon recommendation by the Board, the items will be scheduled for City Council consideration. Any person who receives compensation, remunera-tion or expenses for conducting lobbying activities is required to register as a Lobbyist with the City Clerk prior to engaging in lobbying activities before City Boards, Committees, or the City Council. Should any person desire to appeal any decision of the Board with respect to any matter considered at this meeting, that person must insure that a verbatim record of the proceedings is made, including all testimony and evidence upon which any appeal may be based (See Florida Statues 286.0105). In accordance with the Americans with Disabilities Act, persons needing special accommodation to participate in this proceeding should contact the City Clerk no later than two (2) days prior to the proceeding. Telephone 305.787.6001 for assistance, if hearing impaired, telephone our TDD line 305.948.2909 for assistance.
10/17 16-0000016222OM

PUBLIC HEARING PROPERTY SIGN

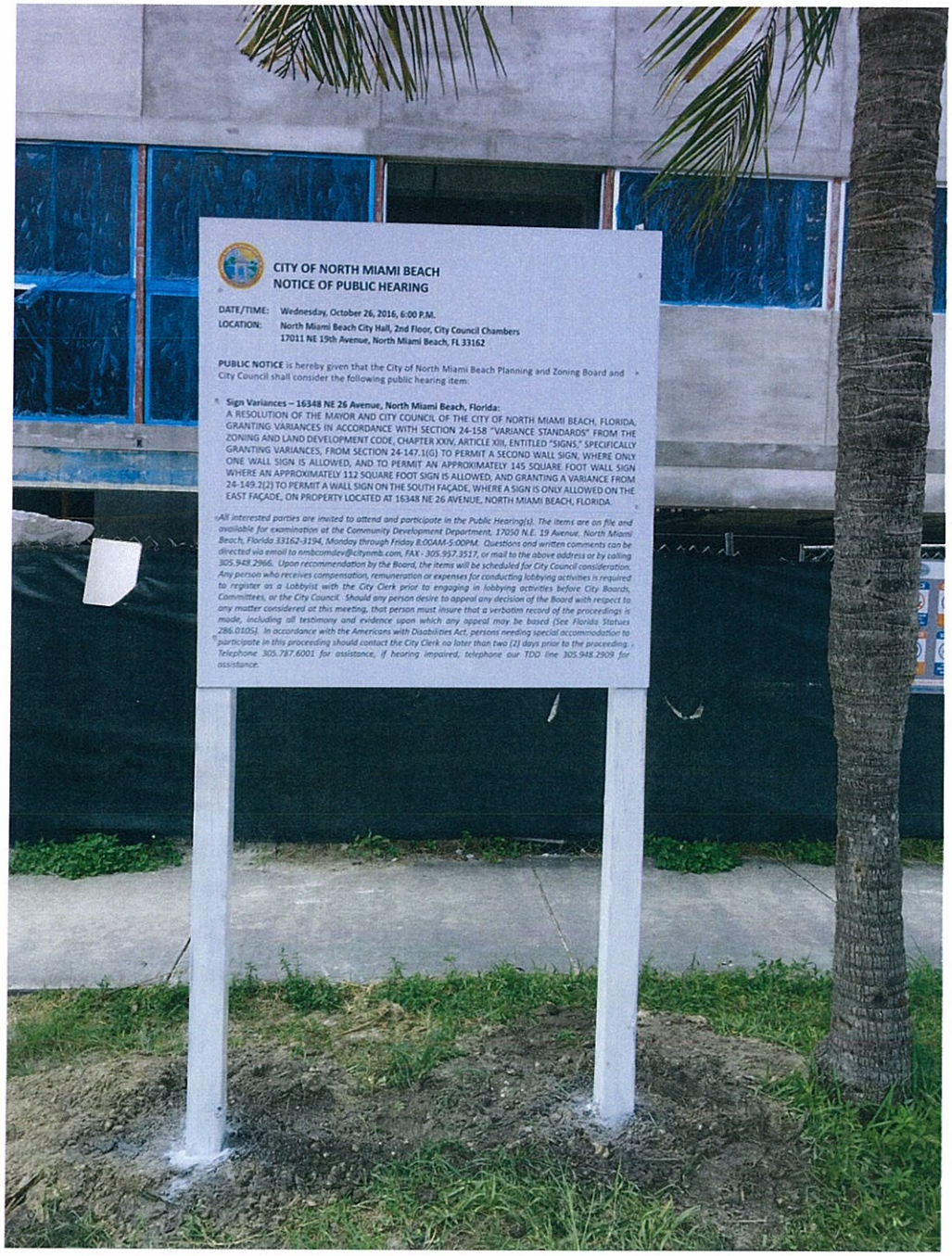

RESOLUTION NO. R2016-XX

A RESOLUTION OF THE MAYOR AND CITY COUNCIL OF THE CITY OF NORTH MIAMI BEACH, FLORIDA, GRANTING VARIANCES IN ACCORDANCE WITH SECTION 24-158 "VARIANCE STANDARDS" FROM THE ZONING AND LAND DEVELOPMENT CODE, CHAPTER XXIV, ARTICLE XIII, ENTITLED "SIGNS," SPECIFICALLY GRANTING VARIANCES, FROM SECTION 24-147.1(G)(1) TO PERMIT A SECOND WALL SIGN, WHERE ONLY ONE WALL SIGN IS ALLOWED, AND TO PERMIT AN APPROXIMATELY 145 SQUARE FOOT WALL SIGN WHERE AN APPROXIMATELY 112 SQUARE FOOT SIGN IS ALLOWED, AND GRANTING A VARIANCE FROM 24-149.2(A)(2) TO PERMIT A WALL SIGN ON THE SOUTH FAÇADE, WHERE A SIGN IS ONLY ALLOWED ON THE EAST FAÇADE, ON PROPERTY LOCATED AT 16348 NE 26 AVENUE, NORTH MIAMI BEACH, FLORIDA.

(P&Z Item No. 16-20, October 26, 2016)

WHEREAS, the property described herein is zoned B-2 General Business District; and

WHEREAS, the Applicant requests approval of variances from Section 24-147.1(G)(1) to construct an approximately 145 square foot second wall sign, where only one approximately 112 square foot wall sign is permitted; and

WHEREAS, the Applicant requests approval for a variance from Section 24-149.2(A)(2) to construct a wall sign on the East façade where an sign is permitted on the South façade of the building located at 16348 N.E. 26th Avenue; and

WHEREAS, on October 26, 2016, the Planning and Zoning Board, by a vote of ____ to ____, recommend approval of the variances, subject to the conditions set forth and included herein below in Section 1.

NOW, THEREFORE, BE IT RESOLVED by the City Council of the City of North Miami Beach, Florida:

Section 1. Variance approval construct an approximately 145 square foot second wall sign on the East facade, where only one approximately 112 square foot wall sign is permitted on the South facade, on property legally described as:

LOT 2 IN BLOCK 2 OF "EASTERN SHORES", ACCORDING TO THE PLAT THEREOF, RECORDED IN PLAT BOOK 65, PAGE 28, OF THE PUBLIC RECORDS OF MIAMI-DADE COUNTY, FLORIDA. CONTAINING 19,330 SQ.FT. OR 0.4437 ACRES, MORE OR LESS; A/K/A 16348 N.E. 26TH AVENUE NORTH MIAMI BEACH, FLORIDA.

is HEREBY **GRANTED** SUBJECT TO THE FOLLOWING CONDITIONS:

1. Unless otherwise provided, all of the below conditions shall be completed/complied with prior to the issuance of the building permit.
2. The conditions of approval for this variance approval, and those conditions of approval in Resolution No. R2014-44, incorporated by reference, are binding on the Applicant, the property owners, operators, and all successors in interest and assigns.
3. Application/supporting documentation. Construction of the proposed project shall be in conformance with the following:
    i. Land Title Survey prepared by Royal Point Land Surveyors, Inc.
    ii. Plans prepared by Bergen Sign Company, dated July 8, 2016, including the following:
        1. Sheet 02.
        2. Proposed East Façade Signage, Sheet 03.
        3. Proposed East Façade Signage, Sheet 04.
        4. Proposed South Facade Signage, Sheet 05.
        5. Proposed South Façade Signage, Sheet 07.
4. All representations and exhibits as prepared and provided to the Community Development Department as part of the Application Submittal Package, as amended.
5. All representations proffered by the Applicant's representatives as a part of the review of the application at public hearings.
6. The words "Aventura", "Miami Beach," and "Sunny Isles Beach" shall not be used by the applicant immediately preceding or following the Project name. The words "Aventura", "Miami Beach" and "Sunny Isles Beach" shall not be part of the website address for the Project. References in the marketing materials to nearby communities shall be limited to descriptions of entertainment, shopping or dining locations, or other landmarks; the Applicant shall identify the Project as being located in the City of North Miami Beach, Florida.
7. No later than 90 days following the final City Council approval, the Applicant shall enter into an agreement with the City to defend, indemnify and hold harmless (using legal counsel acceptable to the City) the City, its agents, servants and employees, from and against any loss, cost, expense, claim, demand or cause of action of whatever kind or nature arising out of or related to any act or omission related to the variances and for which the City, its agents, servants, or employees, are alleged to be liable or charged with such expense. The Applicant shall pay all costs and expenses related to any legal defense required by the City pursuant to the foregoing.
8. Freestanding signs permitted by Section 24-149.2(B) shall be prohibited so long as these variance remain in effect for the subject property.

Section 2. The City Council makes the following FINDINGS OF FACT based upon the substantial competent evidence provided:

- The requested variances are due to a hardship not created by the Applicant and cannot be eliminated and, without the requested variances the communication needs of the Applicant are not served within the existing permitted signage. The proposed wall signage is not an existing nonconforming sign and is not a prohibited sign pursuant to Section 24-143 "Signs Prohibited."

Section 3. Pursuant to Section 24-172(I) of the Code of Ordinances of the City of North Miami Beach, the applicant must apply for a master building permit from the City within one (1) year of the date of this Resolution or the variance approval granted shall be deemed null and void and the applicant shall be required to reinstate the variance process unless the term is extended administratively or by the City Council prior to its expiration.

Section 4. Pursuant to Section 24-175(C) of the Code of Ordinances of the City of North Miami Beach, the applicant must obtain a Business Tax Receipt within one year of the issuance of a Certificate of Occupancy or within one year of site plan approval, as granted in Resolution No. R2014-44, whichever is longer. This may be extended administratively for good cause for one six-month period by the City Manager or designee. This period may be extended by the Mayor and City Council for good cause.

APPROVED AND ADOPTED by the City Council of the City of North Miami Beach, Florida at regular meeting assembled this ___ **day of** _____**, 2016.**

ATTEST:

_____
PAMELA L. LATIMORE
CITY CLERK

_____
GEORGE VALLEJO
MAYOR

(CITY SEAL)

APPROVED AS TO FORM & LANGUAGE
AND FOR EXECUTION

_____
JOSE SMITH
CITY ATTORNEY

SPONSORED BY: Mayor and City Council

COUNCILPERSON	YES	NO	ABSTAIN	ABSENT
Mayor George Vallejo				
Councilman Anthony DeFillipo				
Councilwoman Barbara Kramer				
Councilwoman Marlen Martell				
Councilman Frantz Pierre				
Councilwoman Phyllis Smith				
Councilwoman Beth Spiegel				

City of North Miami Beach, Florida

Community Development Department Public Hearing Application

17050 NE 19th Ave. North Miami Beach, FL 33162 Tel: 305. 948.2966 nmbcomdev@citynmb.com

General information

Property/project name: Valente Brothers Wellness Submittal date 10/17, 2016

Street address(es) of the property: 16348 NE 26th Avenue, North Miami, FL 33161

Proposed use: Jiu Jitsu Academy

Applicant(s)/agent(s): 16348 NE 26th Avenue, LLC.

Application request

The undersigned Applicant(s)/Agent(s)/Property Owner(s) request City of North Miami Beach consideration and review of the following application(s). Please check all that apply.

- ☐ Abandonment and Vacations
- ☐ Annexation
- ☐ Comprehensive Plan Map Amendment - Small Scale
- ☐ Comprehensive Plan Map Amendment - Large Scale
- ☐ Comprehensive Plan Text Amendment
- ☐ Conditional Use
- ☐ Conditional Use – Special Limited
- ☐ Development Agreement
- ☐ Development of Regional Impact
- ☐ Development of Regional Impact - Notice of Proposed Change
- ☐ Planned Unit Development
- ☐ Plat/Replat
- ☐ Site Plan
- ☒ Variance
- ☐ Zoning Code Map Amendment
- ☐ Zoning Code Text Amendment
- ☐ Other: _____

Project information

Street address(es) of the property: 16348 NE 26th Avenue, North Miami, FL 33161

Legal description: Lot(s) Lot 2

Block(s) Block 2 Section (s) _____

Property folio numbers (list all numbers) 07-2215-001-0060

Property owner name(s): 16348 NE 26th Avenue, LLC. / Joaquin Valente

Property owner(s) mailing address(es): 3165 NE 163rd Street, North Miami Beach, FL 33160

Telephone: Business 305.354.2060 Fax 305.919.7275

Other N/A Email joaquinvalente@me.com

Applicant(s)/agent(s): 16348 NE 26th Avenue, LLC. / Joaquin Valente

Applicant(s)/agent(s) mailing address: 3165 NE 163rd Street, North Miami Beach, FL 33160

Telephone: Business 305.354.2060 Fax 305.919.7275

Other N/A Email joaquinvalente@me.com

Proposed site data and land use(s) information

Please complete and/or respond to all requested information. If "Not Applicable," please note NA.

Current Comprehensive Plan Land Use designation(s): Business

Current Zoning District designation(s): B-2 (General Business)

Proposed Comprehensive Plan Land Use designation(s) (if applicable):

Proposed Zoning District designations(s) (if applicable):

Supporting information

A Preapplication Conference is required with the Community Development Staff in advance of application submittal to determine the information necessary to be filed with the application(s). Staff will advise and check the required items at the Preapplication Conference. If necessary, attach additional sheets to application. Staff reserves the right to request additional information as necessary throughout the entire City review process.

- ☐ Aerial.
- ☐ Affidavit providing for property owner's authorization to process application.
- ☐ Annexation supporting materials.
- ☐ Application fees.
- ☐ Application representation and contact information.
- ☐ Appraisal.
- ☐ Architectural/building elevations (color).
- ☐ Architectural/building elevations architectural elements (color).
- ☐ Building floor plans and roof plan.
- ☐ Comprehensive Plan analysis.
- ☐ Comprehensive Plan text amendment justification.

- ☐ Concurrency review application.
- ☐ Department of Transportation Driveway Connection Permit
- ☐ Drainage Plan.
- ☐ Elevations.
- ☐ Encroachments plan.
- ☐ Environmental assessment.
- ☐ Exterior architectural materials board.
- ☐ Landscape plan.
- ☐ Land use map (subject property outlined).
- ☐ Lighting plan.
- ☐ Liquor survey (for only review of location of lounge, bar, or package liquor store).
- ☐ Lobbyist form (City form).
- ☐ Massing model and/or 3D computer model.
- ☐ Ordinances, resolutions, covenants, development agreements, etc. previously granted for the property.
- ☐ Parking study.
- ☐ Photographs (color) of property, adjacent uses and/or streetscape.
- ☐ Plat.
- ☐ Property owners list, including a typewritten list and 2 sets of self-adhesive labels of all properties within 500 feet.
- ☐ Property survey and legal description.
- ☐ Public Realm Improvements Plan for mixed use projects.
- ☐ Public school preliminary concurrency analysis (residential land use/zoning applications only).
- ☐ Sign master plan (colored).
- ☐ Site plan and supporting information.
- ☐ Statement of use and/or cover letter.
- ☐ Streetscape master plan.
- ☐ Text amendment justification.
- ☐ Traffic accumulation assessment.
- ☐ Traffic impact statement.
- ☐ Traffic impact study.
- ☐ Traffic stacking analysis.
- ☐ Utilities consent.
- ☐ Utilities location plan.
- ☐ Vegetation survey.
- ☐ Warranty Deed.
- ☐ Zoning Code text amendment justification.
- ☐ Zoning Map (with subject property outlined)
- ☐ Other:_____

Application submittal requirements – Number of copies

1. Table of Contents. Please provide a Table of Contents identifying all documents provided on all paper and electronic copies. Please clearly indicate date on all pages of plans and drawings.
2. Hard copies.
   a. Fifteen (15) paper copies (11 inch by 17 inch format with binding) of this application and entire application shall be submitted including all the items identified in the Pre-application Conference.
   b. One (1) paper full-size (24 inch by 36 inch format, signed and sealed, stapled and folded) plans of all drawings, illustrations, etc.
   c. One (1) copy of exterior architectural materials board (if applicable).
   d. Fifteen (15) sets of the application.
   e. Fifteen (15) sets of the letter of intent for the project.
   f. Fifteen (15) sets of the most recent survey of the property.
3. Digital media copies. One (1) compact discs (CD ROMs) of the entire application including all items identified in the Pre-application Conference. Each document shall be separated into separate PDF files (i.e., application; site plan, landscape plan; etc.). Please include a "Table of Contents" identifying all PDF file name(s). All discs shall be labeled with the applicant(s) name, project name and date of submittal.

Applicant/agent/property owner affirmation and consent

(I) (We) affirm and certify to all of the following:

1. Submission of the following:
   a. Warranty deed/tax record as proof of ownership for all properties considered as a part of the application request; or
   b. Authorized as the applicant(s)/agent(s) identified herein to file this application and act on behalf of all current property owner(s) and modify any valid City of North Miami Beach entitlements in effect during the entire review process.
2. This application, application supporting materials and all future supporting materials complies with all provisions and regulations of the Zoning Code, Comprehensive Land Use Plan and Code of Ordinances of the City of North Miami Beach unless identified and approved as a part of this application request and/or other previously approved applications.
3. That all the answers to the questions in this application, and all data and other supplementary matter attached to and made a part of the application are honest and true to the best of my knowledge and belief.
4. Understand this application must be complete and accurate before a hearing can be advertised. In the event that I or anyone appearing on my behalf is found to have made a material misrepresentation, either oral or written, regarding this application (I)(We) understand that any City review shall be voidable at the option of the City of North Miami Beach.
5. Understand the failure to provide the information necessary pursuant to the established time frames included but not limited to application submittal, submission of revised documents, etc. for review by City Staff and the designated reviewing entity may cause application to be deferred without further review until such time the requested information is submitted.
6. Understand that the application, all attachments, correspondence and fees become a part of the official records of the City of North Miami Beach and are not returnable.
7. Understand that under Florida Law, all the information submitted as part of the application are public records.

8. All representatives of the application have registered with and completed the required lobbyist forms from the City of North Miami Beach City Clerk's Office.
9. The application before the Board or City Council shall be represented by the legal owner, the prospective owner having a bona fide purchase contract or a duly qualified attorney retained by said owner or prospective owner.
10. Additional costs in addition to the application fees may be assessed associated with the review of applications by the City. These are costs that may be incurred by the applicant due to consultant fees paid by City to review the application. The types of reviews that could be conducted may include but are not limited to the following: concurrency review; property appraisals; traffic impact analyses; vegetation/environmental assessments; archeological/historic assessments; market studies; engineering studies or reports; and legal fees. Such fees will be assessed upon finalization of the City application review. Understand that if payment is not received the prior to Final Pubic Hearing Review, the Application shall be postponed by the City until such time all fees are paid.

(See next page(s) for signature information)
(Please complete all below sections and indicate "Not Applicable (N/A)" as appropriate).

Property owner(s) signature(s):	Property owner(s) print name:
	JOAQUIM VALENTE
Property owner(s) signature(s):	Property owner(s) print name:
Property owner(s) signature(s):	Property owner(s) print name:

Address(es): 3165 NE 163RD ST.
NORTH MIAMI BEACH, FL
33160

Telephone: 305-354-2060	Fax:	Email: JOAQUIM@VALENTEBROTHERS.COM

NOTARIZATION

STATE OF FLORIDA/COUNTY OF
The foregoing instrument was acknowledged before me this 17 day of October 2016 by

(Signature of Notary Public - State of Florida)

DAGMARA AMARO
MY COMMISSION #EE848962
EXPIRES: NOV 04, 2016
Bonded through 1st State Insurance

(Print, Type or Stamp Commissioned Name of Notary Public)
☑ Personally Known OR ☐ Produced Identification; Type of Identification Produced _____

Contract Purchaser(s) Signature:	Contract Purchaser(s) Print Name:
Contract Purchaser(s) Signature:	Contract Purchaser(s) Print Name:

Address(es):		
Telephone:	Fax:	Email:

NOTARIZATION

STATE OF FLORIDA/COUNTY OF
The foregoing instrument was acknowledged before me this _____ day of _____ 20__ by
_____
(Signature of Notary Public - State of Florida)

(Print, Type or Stamp Commissioned Name of Notary Public)
☐ Personally Known OR ☐ Produced Identification; Type of Identification Produced _____

Applicant(s)/Agent(s) Signature(s):	Applicant(s)/Agent(s) Print Name: JOAQUIM VALENTE
Address(es): 3165 NE 163rd ST NORTH MIAMI BEACH, FL 33160	
Telephone: 305-354-2060	Fax:	Email: JOAQUIM@VALENTEBROTHERS.COM

NOTARIZATION

STATE OF FLORIDA/COUNTY OF
The foregoing instrument was acknowledged before me this 17 day of octobr 2016 by
_____
(Signature of Notary Public - State of Florida)

DAGMARA AMARO
MY COMMISSION #EE848962
EXPIRES: NOV 04, 2016
Bonded through 1st State Insurance

(Print, Type or Stamp Commissioned Name of Notary Public)
☑ Personally Known OR ☐ Produced Identification; Type of Identification Produced _____

OFFICE OF THE PROPERTY APPRAISER

Summary Report

Generated On : 10/24/2016

Property Information	
Folio:	07-2215-001-0060
Property Address:	16348 NE 26 AVE North Miami Beach, FL 33160-4004
Owner	16348 NE 26TH AVENUE LLC
Mailing Address	3165 NE 163 ST NORTH MIAMI BEACH, FL 33160 USA
Primary Zone	6400 COMMERCIAL - CENTRAL
Primary Land Use	1713 OFFICE BUILDING - ONE STORY : OFFICE BUILDING
Beds / Baths / Half	0 / 0 / 0
Floors	1
Living Units	0
Actual Area	Sq.Ft
Living Area	Sq.Ft
Adjusted Area	5,774 Sq.Ft
Lot Size	19,331 Sq.Ft
Year Built	1982

Assessment Information			
Year	2016	2015	2014
Land Value	$773,240	$676,585	$676,585
Building Value	$346,613	$316,473	$309,106
XF Value	$19,848	$20,112	$20,399
Market Value	$1,139,701	$1,013,170	$1,006,090
Assessed Value	$1,114,487	$1,013,170	$1,006,090

Taxable Value Information			
	2016	2015	2014
County			
Exemption Value	$0	$0	$0
Taxable Value	$1,114,487	$1,013,170	$1,006,090
School Board			
Exemption Value	$0	$0	$0
Taxable Value	$1,139,701	$1,013,170	$1,006,090
City			
Exemption Value	$0	$0	$0
Taxable Value	$1,114,487	$1,013,170	$1,006,090
Regional			
Exemption Value	$0	$0	$0
Taxable Value	$1,114,487	$1,013,170	$1,006,090

Benefits Information				
Benefit	Type	2016	2015	2014
Non-Homestead Cap	Assessment Reduction	$25,214		

Note: Not all benefits are applicable to all Taxable Values (i.e. County, School Board, City, Regional).

Sales Information			
Previous Sale	Price	OR Book-Page	Qualification Description
03/06/2014	$1,200,000	29066-0555	Qual by exam of deed
03/07/2013	$1,254,878	28835-4463	Financial inst or "In Lieu of Forclosure" stated
08/01/2005	$1,750,000	23719-3726	Sales which are qualified
12/01/1999	$400,000	18927-4728	Sales which are qualified

Short Legal Description

EASTERN SHORES PB 65-28
LOT 2 BLK 2
LOT SIZE 19331 SQUARE FEET
OR 18927-4728 1299 1
COC 23719-3726 08 2005 1

The Office of the Property Appraiser is continually editing and updating the tax roll. This website may not reflect the most current information on record. The Property Appraiser and Miami-Dade County assumes no liability, see full disclaimer and User Agreement at http://www.miamidade.gov/info/disclaimer.asp

Version:

Detail by Entity Name

Florida Limited Liability Company

16348 NE 26TH AVENUE LLC

Filing Information

Document Number	L13000124230
FEI/EIN Number	46-3561445
Date Filed	09/03/2013
State	FL
Status	ACTIVE
Last Event	LC AMENDED/RESTATED ARTICLE/NAME CHANGE
Event Date Filed	02/10/2014
Event Effective Date	NONE

Principal Address

3165 NE 163RD ST
N MIAMI BEACH, FL 33160

Mailing Address

3165 NE 163RD ST
N MIAMI BEACH, FL 33160

Registered Agent Name & Address

CORPORATE CREATIONS NETWORK, INC.
11380 PROSPERITY FARMS ROAD #221E
PALM BEACH GARDENS, FL 33410

Authorized Person(s) Detail

Name & Address

Title MGR

VALENTE, JOAQUIM
3165 NE 163RD ST
N MIAMI BEACH, FL 33160

Title MGR

Valente, Pedro

3165 NE 163RD ST
N MIAMI BEACH, FL 33160

Title MGR

Valente, Guilherme
3165 NE 163RD ST
N MIAMI BEACH, FL 33160

Annual Reports

Report Year	Filed Date
2014	04/26/2014
2015	04/28/2015
2016	03/28/2016

Document Images

03/28/2016 -- ANNUAL REPORT	View image in PDF format
04/28/2015 -- ANNUAL REPORT	View image in PDF format
12/10/2014 -- AMENDED ANNUAL REPORT	View image in PDF format
04/26/2014 -- ANNUAL REPORT	View image in PDF format
02/10/2014 -- LC Amended/Restated Article/NC	View image in PDF format
09/03/2013 -- Florida Limited Liability	View image in PDF format

Copyright © and Privacy Policies
State of Florida, Department of State

The Lasarte LAW FIRM

P. 305.594.2877
F. 305.594.2878

The Lasarte Law Firm
3250 N.E. First Avenue
Suite 334
Miami, FL 33137
www.lasartelaw.com

Felix M. Lasarte, Esq.
felix@lasartelaw.com

October 17, 2016

VIA ELECTRONIC DELIVERY

Mr. Justin Proffitt, AICP
Planning and Zoning Manager, Community Development
City of North Miami Beach
17050 NE 19th Avenue, 1st Floor
North Miami Beach, Florida
Justin.Proffitt@citynmb.com

Re: Sign Variance / Folio # 07-2215-001-0060 / 16348 NE 26th Ave., North Miami Beach, FL ("Property")

Dear Mr. Proffitt:

Our office represents 16348 NE 26th Avenue, LLC in connection with the development of a Jiu Jitsu academy located at the above referenced Property. This site was approved for the construction of a Jiu Jitsu academy by the City of North Miami Beach council. The name of the academy will be Valente Brothers Jiu Jitsu, which is a local business that has been operating in North Miami Beach since 2003. This property will be their new home and they are excited to move in and commence their operations.

Due to the nature of our client's business, a lot of their clientele is walk-in business and that is directly attributed to signage. The code permits signage facing the primary road NE 26th avenue, but this is an internal road with only neighborhood traffic. Our client would like to obtain a variance to place a sign as depicted in Exhibit "A" on the southern wall. This will allow visibility from NE 163rd Street. The sign will not cause any nuisance, since it will face the rear of an existing gasoline service station. We respectfully request a variance from sections 24-147.1(G) and 24-149.2(2) of the North Miami Beach Code of Ordinances. This variance will effectively allow a second sign to be installed on the southern wall and to exceed the maximum sign size from 112 square feet to 145 square feet.

If you have any questions or concerns, please call our office.

(Signature page to follow)

Sincerely,

Felix M. Lasarte, Esq.

CC: Joaquim Valente
Miguel Diaz de la Portilla, Esq.

VALENTE BROTHERS
SELF DEFENSE & WELLNESS

16360 NE 26th Ave. North Miami, FL

SIGNAGE 07/08/2016

■ SIGNAGE PACKAGE ■

161 East Railway Avenue,
Paterson, NJ 07503
973.742.7755 Fax.742.0598

BSC BERGEN SIGN COMPANY

4100 North Powerline Road Suite L-2
Pompano Beach, Fl 33073
954.957.9961 Fax.954.957.9014

www.bergensign.com

Valente Brothers Wellness

These designs are the original works of Bergen Sign Company, Inc. and are intended for your personal use in connection with the project we are working on for you. They are not to be copied, reproduced or exhibited to anyone outside you organization without the express written consent of Bergen Sign Company, Inc.

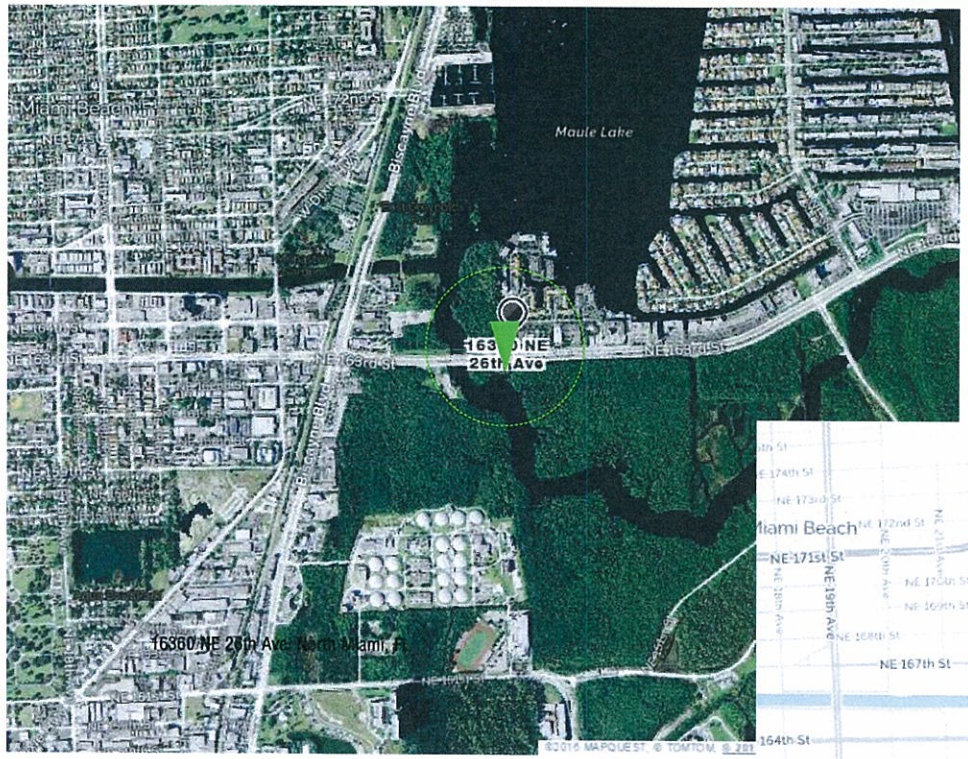

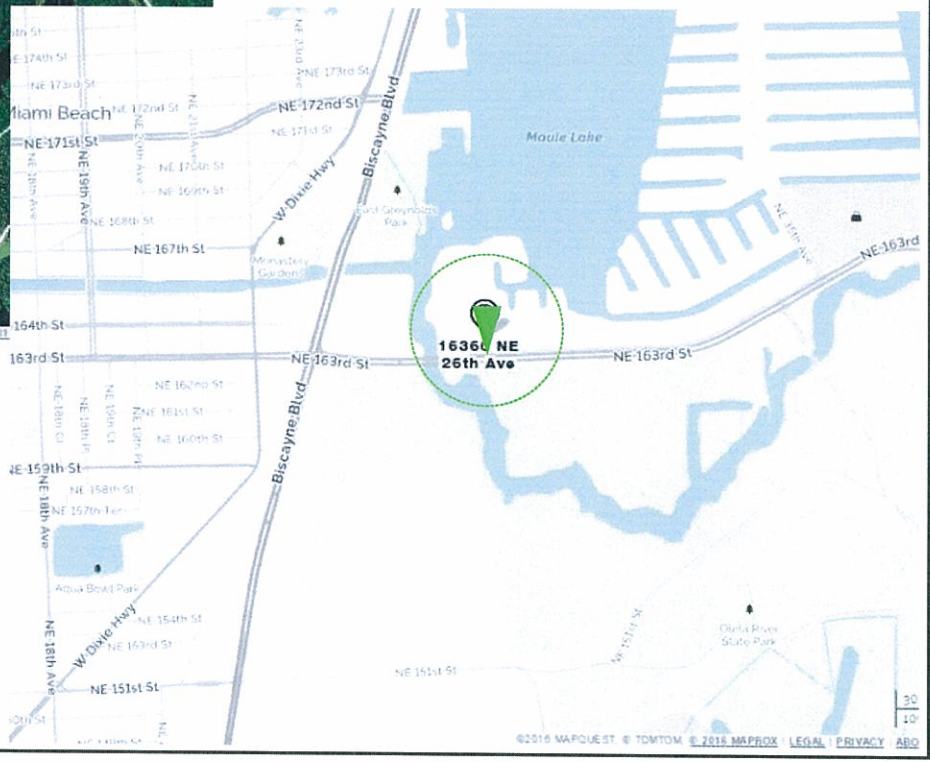

BERGEN SIGN COMPANY
161 East Railway Avenue,
Paterson, NJ 07503
973.742.7755 Fax.742.0598

4100 North Powerline Road Suite L-2
Pompano Beach, Fl 33073
954.957.9961 Fax.954.957.9014
www.bergensign.com

Work Order:

Client
Valente Brothers Wellness

Project Address
Valente Brothers Wellness
16348 NE 26th Ave.
North Miami, FL 33161

Customer Approval

Signature

Approval Date

NOTE TO CUSTOMER: Please be sure that all the information on this drawing is correct. Your product will be manufactured based on the these drawings. Any revisions after fabrication has commenced, will be billed to the customer. If there are any questions as to color size or placement, NOW is the time to clarify them. You are entitled to two (2) revisions free of charge. additional revisions will be billed on a T&M basis. Colors due to the difference between paint, plastic & other materials, printed colors do not match actual finish colors.

ALL ELECTRIC SIGNS ARE UL LISTED AND LABELED

Engineer Information:

Engineer Seal

ENGINEER COMMENT:
Design, Fabrication & Construction Shall Confirm To State & City Codes

Drawing By:	Ryan
	N:\Valente Brothers
Date:	08/23/2016
Sheet:	02

Valente Brothers Wellness

These designs are the original works of Bergen Sign Company, Inc. and are intended for your personal use in connection with the project we are working on for you. They are not to be copied, reproduced or exhibited to anyone outside you organization without the express written consent of Bergen Sign Company, Inc.

INTERNALLY ILLUMINATED **CABINET**

Scale: 3/4"= 1'-0"

INTERNALLY ILLUMINATED **CABINET**

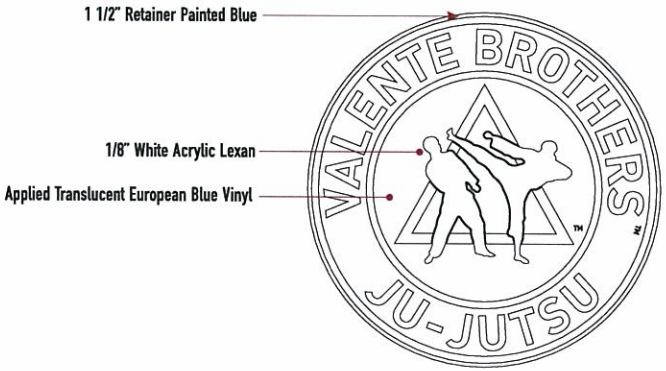

Scale: 3/4" = 1'-0"

Satin White Paint

3M European Blue Translucent Vinyl (3630-137)

Face: Blue
Returns: PMS 2757 Blue
Retainer: 2" PMS 2757 Blue
LEDs: White
Wireway: n/a
Letter Height: 8 1/2"
Letter depth: 3/4"
Letter Style: Logotype
Allowed Sq. Ft.: _____
Proposed Sq. ft: 49.0

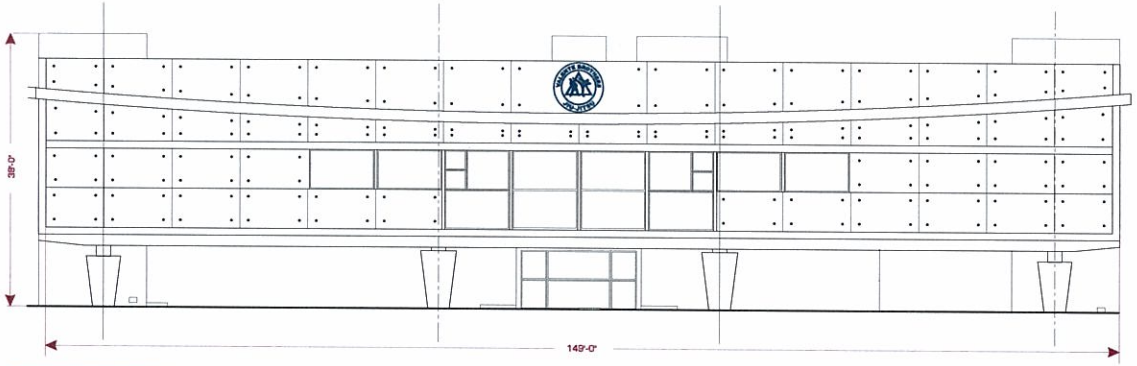

Scale: 1/16" = 1' - 0"

East Elevation

NTS

BERGEN SIGN COMPANY
161 East Railway Avenue,
Paterson, NJ 07503
973.742.7755 Fax.742.0598

4100 North Powerline Road Suite L-2
Pompano Beach, Fl 33073
954.957.9961 Fax.954.957.9014
www.bergensign.com

Work Order:

Client
Valente Brothers Wellness

Project Address
Valente Brothers Wellness
16348 NE 26th Ave.
North Miami, FL 33161

Customer Approval

Signature

Approval Date

NOTE TO CUSTOMER: Please be sure that all the information on this drawing is correct. Your product will be manufactured based on the these drawings. Any revisions after fabrication has commenced, will be billed to the customer. If there are any questions as to color size or placement, NOW is the time to clarify them. You are entitled to two (2) revisions free of charge. additional revisions will be billed on a T&M basis. Colors: due to the difference between paint, plastic & other materials, printed colors do not match actual finish colors.

ALL ELECTRIC SIGNS ARE UL LISTED AND LABELED

Engineer Information:

Engineer Seal

ENGINEER COMMENT:
Design, Fabrication & Construction Shall Confirm To State & City Codes

Drawing By: Ryan
N:\Valente Brothers
Date: 08/23/2016
Sheet: 03

Valente Brothers Wellness

These designs are the original works of Bergen Sign Company, Inc. and are intended for your personal use in connection with the project we are working on for you. They are not to be copied, reproduced or exhibited to anyone outside you organization without the express written consent of Bergen Sign Company, Inc.

3D RENDERING

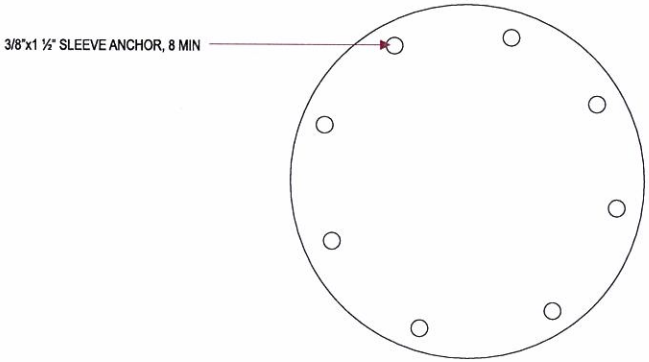

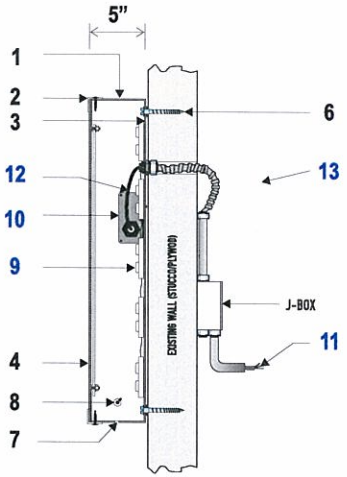

UL LISTED

Fabrication & Color Specifications for Letters — Face-Lit

ITEM	DESCRIPTION	SIZE	EXTERIOR COLOR	INTERIOR COLOR
1	5" DEEP ALUM RETURNS (Letters & Logo)	.040"	PMS 2945 BLUE	WHITE
2	TRIMCAP (Letters & Logo)	1"	BLUE	N/A
3	ALUMINUM CHANNEL BACKS	.063"	N/A	WHITE
4	LEXAN FACES (Letters)	1/8"	PMS 2945 BLUE, PMS 1505 ORANGE, PMS 107 YELLOW, WHITE	

Other Specifications

ITEM	DESCRIPTION	SIZE	COLOR	MODEL	OTHER INFO:
5		N/A	N/A	N/A	
6	3/8"x1 ½" SLEEVE ANCHOR, 8 MIN	3/8"	N/A	N/A	N/A
7	WEEP HOLE	1/4"	N/A	N/A	MIN 2 PER LETTER
8	DISCONNECT SWITCH				20 AMP WEATHER PROOF

Electrical Specifications**

ITEM	DESCRIPTION	SIZE	QUAN.	COLORS	AMPS TOTAL	CIRCUITS	VOLTS
9	L.E.D		98	WHITE	N/A	N/A	N/A
10	POWER SUPPLY - 12V		2	N/A	5 Per	20 AMP Per	120
11	PRIMARY ELEC. AT J-BOX (BY OTHERS)	STD.	N/A	N/A	N/A	N/A	120
12	GA CABLE	16	N/A	N/A	N/A	N/A	N/A
13	FLEXIBLE CONDUIT	STD	N/A	N/A	N/A	N/A	N/A

Note: (3) #12 CU CONDUCTORS
THHN OR THWN
PANEL = LP
BREAKER #16

SECTION VIEW - EXTERIOR CHANNEL LETTER - FLUSH MOUNT

SCALE: NTS

BERGEN SIGN COMPANY
161 East Railway Avenue,
Paterson, NJ 07503
973.742.7755 Fax.742.0598

4100 North Powerline Road Suite L-2
Pompano Beach, Fl 33073
954.957.9961 Fax.954.957.9014
www.bergensign.com

Work Order:

Client
Valente Brothers Wellness

Project Address
Valente Brothers Wellness
16348 NE 26th Ave.
North Miami, FL 33161

Customer Approval

Signature

Approval Date

NOTE TO CUSTOMER: Please be sure that all the information on this drawing is correct. Your product will be manufactured based on the these drawings. Any revisions after fabrication has commenced, will be billed to the customer. If there are any questions as to color size or placement, NOW is the time to clarify them. You are entitled to two (2) revisions free of charge. additional revisions will be billed on a T&M basis. Colors: due to the difference between paint, plastic & other materials, printed colors do not match actual finish colors.

ALL ELECTRIC SIGNS ARE UL LISTED AND LABELED

Engineer Information:

Engineer Seal

ENGINEER COMMENT:
Design, Fabrication & Construction Shall Confirm To State & City Codes

Drawing By: Ryan
N:\Valente Brothers
Date: 08/23/2016
Sheet: 04

Valente Brothers Wellness

These designs are the original works of Bergen Sign Company, Inc. and are intended for your personal use in connection with the project we are working on for you. They are not to be copied, reproduced or exhibited to anyone outside you organization without the express written consent of Bergen Sign Company, Inc.

CABINET SIGN WITH CHANNEL LETTERS

Scale: 1/4" = 1'-0"

White

3M European Blue Translucent Vinyl (3630-137)

Face: Blue
Returns: to match faces
Retainer: Retainer: 1/2" Blue
LEDs: White
Wireway: n/a
Letter Height: 22 ½" - 15"
Letter depth:
Letter Style: Logotype
Allowed Sq. Ft.: _____
Proposed Sq. ft: 145.0

CABINET SIGN WITH CHANNEL LETTERS

Individually Illuminated 28" Tall Channel Letters With White Plex Face
Applied European Blue Vinyl
Rounde 64" Tall Front-Lit Box
Individually Illuminated 24" Tall Channel Letters With White Plex Face

Scale: 1/4" = 1'-0"

Night View

NTS

Day View

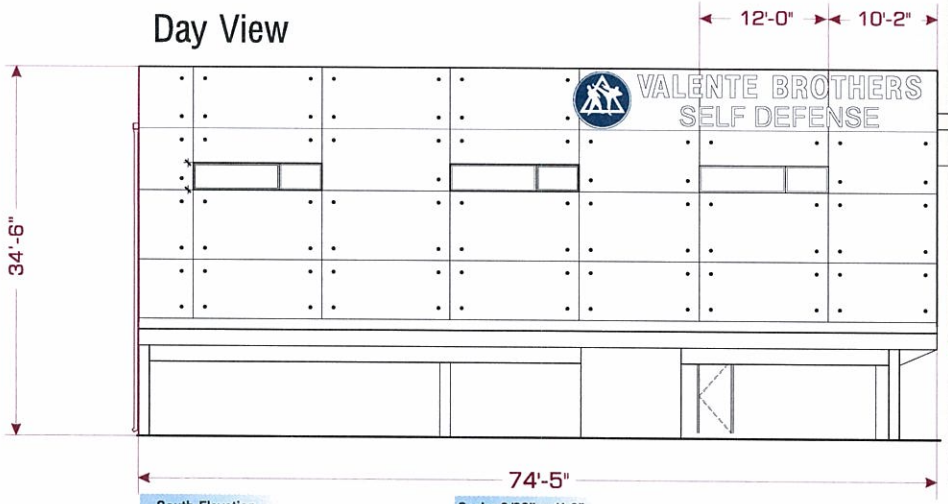

South Elevation

Scale: 3/32" = 1'-0"

BERGEN SIGN COMPANY
161 East Railway Avenue,
Paterson, NJ 07503
973.742.7755 Fax.742.0598

4100 North Powerline Road Suite L-2
Pompano Beach, Fl 33073
954.957.9961 Fax.954.957.9014
www.bergensign.com

Work Order:

Client
Valente Brothers Wellness

Project Address
Valente Brothers Wellness
16348 NE 26th Ave.
North Miami, FL 33161

Customer Approval

Signature

Approval Date

NOTE TO CUSTOMER: Please be sure that all the information on this drawing is correct. Your product will be manufactured based on the these drawings. Any revisions after fabrication has commenced, will be billed to the customer. If there are any questions as to color size or placement, NOW is the time to clarify them. You are entitled to two (2) revisions free of charge. additional revisions will be billed on a T&M basis. Colors due to the difference between paint, plastic & other materials, printed colors do not match actual finish colors.

ALL ELECTRIC SIGNS ARE UL LISTED AND LABELED

Engineer Information:

Engineer Seal

ENGINEER COMMENT:
Design, Fabrication & Construction Shall Confirm To State & City Codes

Drawing By: Ryan
N:\Valente Brothers
Date: 08/23/2016
Sheet: 05

These designs are the original works of Bergen Sign Company, Inc. and are intended for your personal use in connection with the project we are working on for you. They are not to be copied, reproduced or exhibited to anyone outside you organization without the express written consent of Bergen Sign Company, Inc.

Scale: 1/4" = 1'-0"

Satin White Paint

3M European Blue Translucent Vinyl (3630-137)

Face: Blue
Returns: PMS 2757 Blue
Retainer: 2" PMS 2757 Blue
LEDs: White
Wireway: n/a
Letter Height: 8 1/2"
Letter depth: 3/4"
Letter Style: Logotype
Allowed Sq. Ft.: _____
Proposed Sq. ft: 49.0

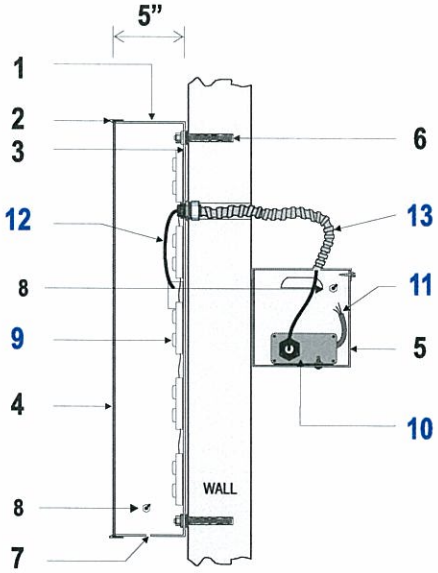

UL LISTED

Fabrication & Color Specifications for Letters & Logo — **Face-Lit Neon**

ITEM	DESCRIPTION	SIZE	EXTERIOR COLOR	INTERIOR COLOR
1	5" DEEP ALUM RETURNS (Letters & Logo)	.040"	PRE-FINISH BLACK	WHITE
2	TRIMCAP (Letters & Logo)	1"	BLACK	N/A
3	ALUMINUM CHANNEL BACKS	.063"	N/A	WHITE
4	ACRYLITE PLEX FACES (Letters)	.1875"	2793 RED ACRYLIC	

Other Specifications

ITEM	DESCRIPTION	SIZE	COLOR	MODEL	OTHER INFO:
5	GALVANIZED TRANSFORMER BOX	N/A	N/A	N/A	WEATHERPROOF ENCLOSURE
6	¼" X 2 ½" TAPCONS, MIN 3 PER LETTER	3/8"	N/A	N/A	N/A
7	WEEP HOLE	1/4"	N/A	N/A	MIN 2 PER LETTER
8	DISCONNECT SWITCH				20 AMP WEATHER PROOF

Electrical Specifications**

ITEM	DESCRIPTION	SIZE	QUAN.	COLORS	AMPS TOTAL	CIRCUITS	VOLTS
9	L.E.D	**	270	RED	N/A	N/A	N/A
10	POWER SUPPLY - 12V		4	N/A	5 Per	20 AMP Per	120
11	PRIMARY ELEC. AT J-BOX (BY OTHERS)	STD.	N/A	N/A	N/A	N/A	120
12	GA CABLE	16	N/A	N/A	N/A	N/A	N/A
13	FLEXIBLE CONDUIT	STD	N/A	N/A	N/A	N/A	N/A

Production to provide this information

1 SECTION-EXTERIOR CHANNEL LETTER - LED - FLUSH MOUNT
NOT TO SCALE

BERGEN SIGN COMPANY
161 East Railway Avenue,
Paterson, NJ 07503
973.742.7755 Fax.742.0598

4100 North Powerline Road Suite L-2
Pompano Beach, Fl 33073
954.957.9961 Fax.954.957.9014
www.bergensign.com

Work Order:

Client
Valente Brothers Wellness

Project Address
Valente Brothers Wellness
16348 NE 26th Ave.
North Miami, FL 33161

Customer Approval

Signature

Approval Date

NOTE TO CUSTOMER: Please be sure that all the information on this drawing is correct. Your product will be manufactured based on the these drawings. Any revisions after fabrication has commenced, will be billed to the customer. If there are any questions as to color size or placement, NOW is the time to clarify them. You are entitled to two (2) revisions free of charge. additional revisions will be billed on a T&M basis. Colors: due to the difference between paint, plastic & other materials, printed colors do not match actual finish colors.

ALL ELECTRIC SIGNS ARE UL LISTED AND LABELED

Engineer Information:

Engineer Seal

ENGINEER COMMENT:
Design, Fabrication & Construction Shall Confirm To State & City Codes

Drawing By: Ryan
N:\Valente Brothers
Date: 08/23/2016
Sheet: 07

ALTA/NSPS LAND TITLE SURVEY

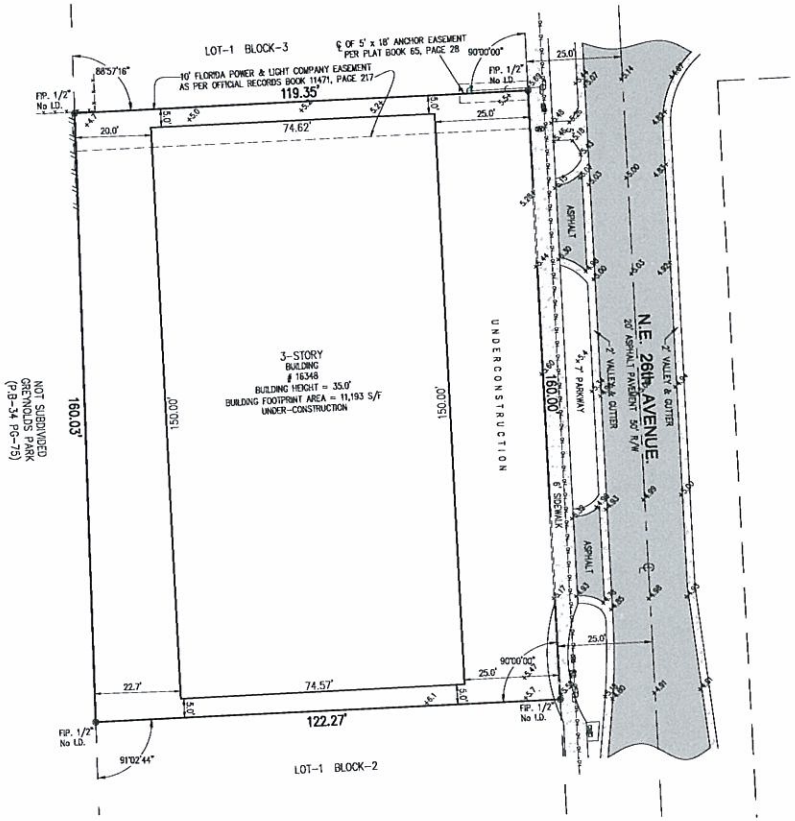

GRAPHIC SCALE

(IN FEET)
1 inch = 15 ft.

LOCATION MAP

PORTION OF SECTION 15, TOWNSHIP 52 SOUTH, RANGE 42 EAST
MIAMI-DADE COUNTY, FLORIDA
NOT TO SCALE

PROPERTY ADDRESS:

16348-90 NE 26th. AVENUE, NORTH MIAMI BEACH, FLORIDA 33160
FOLIO#: 07-2215-001-0060

LEGAL DESCRIPTION:

Lot 2 in Block 2 of "EASTERN SHORES", according to the Plat thereof, recorded in Plat Book 65, Page 28, of the Public Records of Miami-Dade County, Florida.

Containing 19,330 Sq. Ft. or 0.4437 Acres, more or less.

TITLE REVIEW NOTES:

SCHEDULE B – SECTION II

TITLE COMMITMENT PROVIDED BY:
FIRST AMERICAN TITLE INSURANCE COMPANY
Commitment No.: 1062-3557855 & 1062-3557872, effective date: April 29, 2016 @ 8:00 AM

Items 1 through 4: "General & Special Exceptions".

5a. Any lien or right to a lien for labor, services or materials provided in connection with the construction of the improvements referred to in the Notice of Commencement recorded August 13, 2015 in Book 29737, Page 987. (Does affect Subject Property – Not a Plotable Survey Item)

The following exceptions as per previous Title Commitment prepared by FIRST AMERICAN TITLE INSURANCE COMPANY Commitment No.: 11770, effective date: January 1, 2014 @ 11:59 PM

10. Restrictions, dedications, conditions, reservations, easements and other matters shown on the plat of EASTERN SHORES, as recorded in Plat Book 65, Page 28 (Does affect Subject Property – Record Plat)

11. Declaration of Restrictions, filed May 15,1957, in Book 338, Page 601. (Does affect Subject Property – Agreement – Not a Plotable Survey Item)

12. Easement granted to North Miami Utility Company, Inc., filed June 13. 1958, in Book 883, Page 165, as amended by instrument filed August 10,1961, under Clerk's File No. 61 R-134905. (Does affect Subject Property – Agreement – Not a Plotable Survey Item)

13. Memorandum regarding the Eastern Shores First Addition Security Guard
Special Taxing District, filed June 20.1994, in Book 16409, Page 921. (Does affect Subject Property – Not a Plotable Survey Item)

14. Resolution No. 1747-95 regarding the Eastern Shores Security Special Taxing District, filed January 23, 1996, in Book 17069, Page 2672. (Does affect Subject Property – Agreement – Not a Plotable Survey Item)

15. Resolution No. 1748-95 regarding assessments for the Eastern Shores Security Special Taxing District, recorded in Book 17218, Page 2896. (Does affect Subject Property – Agreement – Not a Plotable Survey Item)

16. Easement granted to Florida Power & Light Company by instrument recorded in Book 11471, Page 217. (Does affect Subject Property – Agreement – Plotted on Survey)

All of the above noted documents recorded in the Public Records of Miami-Dade County, Florida.

SURVEYOR'S NOTES:

1) The Legal Description to the Property was obtained from FIRST AMERICAN TITLE INSURANCE COMPANY, Commitment for Title Insurance.
2) This Certification is only for the lands as described, it is not a certification of Title, Zoning, Easements, or Freedom of Encumbrances. OPINION OF TITLE.
3) An examination of Commitment issued by FIRST AMERICAN TITLE INSURANCE COMPANY Commitment No.:1062-3557855 & 1062-3557872, effective date: April 29, 2016 @ 8:00 AM, was made to determine recorded instruments, if any affecting this property. However, there may be additional restrictions not shown on this survey that may be found in the Public Records of this County.
4) Accuracy:
The expected use of the land, as classified in the Standards of Practice (5J-17/AC), is "Residential High Risk". The minimum relative distance accuracy for this type of boundary survey is 1 foot in 10,000 feet. The accuracy obtained by measurement and calculation of a closed geometric figure was found to exceed this requirement.
5) All measurements shown hereon are made in accordance with the United States Standard Feet.
6) Foundations and/or footings that may cross beyond the boundary lines of the parcel herein described are not shown hereon.
7) Not valid without the signature and the original raised seal of a Florida Licensed Surveyor and Mapper. Additions or deletions to survey maps or reports by other than the signing party or parties are prohibited without written consent of the signing party or parties.
8) ZONING INFORMATION:
Zoning Classification: B-2 (General Business District)
Source: City of North Miami Beach Zoning Department
9) Underground utilities are not depicted hereon, contact the appropriate authority prior to any design work or construction on the property herein described. Surveyor shall be notified as to any deviation from utilities shown hereon.
10) The surveyor does not determine fence and/or wall ownership.
11) Ownership subjects to: OPINION OF TITLE.
12) Type of Survey: ALTA/ NSPS LAND TITLE SURVEY.
13) The North arrow shown hereon are based on record plat of "EASTERN SHORES", recorded in Plat Book 65, at Page 28, of the Public Records of Miami-Dade County, Florida.
14) Flood Zone Data: Community/ Panel #120656/0142/L Dated: September 11, 2009
Flood Zone "AE" Base Flood Elevation = +8.0'
15) All measurements shown hereon are made in accordance with the United States Standard Feet.
16) Elevations shown hereon (if any) are relative to National Geodetic Vertical Datum (1929 Mean Sea Level)
17) Benchmark Used: Miami-Dade County Benchmark #N-605. Elevation= +7.77'
18) Total Available Parking: 23 Standard Spaces & 2 Handicap Spaces
19) Legal Description shown hereon as per above noted title commitment.
20) Building Setbacks: Front = 25 feet / Rear = 20 feet / Interior Side = 0 feet
21) Subject property has access to a public right-of-ways: NE 26th. Avenue.
22) All visible above ground utilities noted on survey sketch.
23) Entire site and structure was under construction at the time this survey was performed.
24) This PLAN OF SURVEY has been prepared for the exclusive use of the entities named hereon. The Certificate does not extend to any unnamed party.

SURVEYOR'S CERTIFICATE:

THIS SURVEY CERTIFIED TO:

- 16348 NE 26TH AVENUE LLC, a Florida limited liability company
- NELSON SLOSHEROAS, P.A.
- FIRST AMERICAN TITLE INSURANCE COMPANY
- JPMORGAN CHASE BANK, N.A., its successors and/or assigns as their interest may appear

This is to certify that this map or plat and the survey on which it is based were made in accordance with the 2016 Minimum Standard Detail Requirements for ALTA / NSPS Land Title Surveys, jointly established and adopted by ALTA and NSPS, and includes items 1 thru 4, 7(a), 11 (aboveground utilities only), 16, 17 and 20 of Table A thereof. The fieldwork was completed on 07/06/2016;

I further certify that this survey was prepared in accordance with the applicable provisions of Chapter 5J-17, Florida Administrative Code.

Copies of this survey are invalid unless embossed with the seal of the signing professional surveyor and mapper. Said embossed copies are for the specific use of those entities that the survey have been certified to.

ROYAL POINT LAND SURVEYORS, INC.
LB No. 7282

BY: _____
PABLO J. ALFONSO, Professional Surveyor & Mapper No. 5850
State of Florida
Date of Survey: 07/06/2016
Date of Last Revision:

Survey Performed By:
ROYAL POINT LAND SURVEYORS, INC.
6175 NW 153rd. Street – Suite 321, Miami Lakes, Florida 33014
Phone: 305-822-6062/ Fax: 305-827-9669

LEGEND

- OH — Overhead Wire Line
- Wood Fence
- X — Chain Link Fence
- Iron Fence
- Monument Line
- Centerline
- Property Line
- A=Arc
- BRG=Bearing
- CH=Chord
- Δ=Delta
- L=Length
- R=Radius
- T=Tangent
- ø=Diameter
- x 45 =Existing Elevations
- =Catch Basin
- =Water Meter
- =Electric Box
- =Sanitary Manhole
- =Irrigation Valve
- =Wood Pole
- =Conc. Pole
- =Light Pole
- =Fire Hydrant
- =Traffic Sign
- =Inlet
- =Electric Box
- =Electric Meter Box
- =Traffic Signal Box
- =Gas Valve
- =Water Valve
- =Manhole
- =Electric Manhole
- A/C=Air Conditioner
- Conc. =Concrete
- C.B.S. =Concrete Block & Stucco
- D.E. =Drainage Easement
- D.M.E.=Drainage Maintenance Easement
- F.D.H. =Found Drill Hole
- F.F.E. =Finish Floor Elevation
- F.I.P. =Found Iron Pipe/Pin
- F.I.R. =Found Iron Rebar
- F.N. =Found Nail
- F.N.D =Found Nail & Disc
- F.P.L. =Florida Power Light Transformer
- H =Height
- L.M.E. =Lake Maintenance Easement
- (M) =Measured
- (P) =Platted
- P.O.B. =Point of Beginning
- P.O.C. =Point of Commencement
- (R) =Record
- Res. =Residence
- SP/R =Set Iron Pin/Rebar
- S =Spread
- U.E. =Utility Easement

NO	DATE	DESCRIPTION	BY	APP.

RECORD OF REVISION

ROYAL POINT LAND SURVEYORS, INC.
L.B.# 7282
6175 NW 153 ST., SUITE 321, MIAMI LAKES, FL 33014 ** TEL.305-822-6062 ** FAX.305-827-9669

PREPARED FOR: 16348 NE 26TH AVENUE LLC

TYPE OF PRODUCT: ALTA / NSPS LAND TITLE SURVEY

DRAWN: J.G.
CHECKED: P.J.A.
SCALE: 1" = 15'
FIELD DATE: 07/06/2016
JOB No. RP 16-06ZZ
SHEET: 1 OF 1 SHEET

Item 16-21

Medical Marijuana Ordinance

PLANNING & ZONING BOARD
STAFF REPORT

TO: Planning & Zoning Board Members

VIA: Richard Lorber, AICP, Community Development Director

FROM: Justin Proffitt, AICP, Planning & Zoning Manager

DATE: October 26, 2016

RE: Item #16-21 - Zoning & Land Development Code Text Amendment – Medical Marijuana Ordinance.

Request

The applicant, City of North Miami Beach, proposes an ordinance to provide the conditions and requirements for the regulation of Medical Marijuana Dispensaries and Medical Marijuana Treatment Centers.

Background

In 2014, the Florida Legislature adopted the Compassionate Medical Cannabis Act providing for the medical use of low-THC cannabis for very limited medical conditions. The Act authorizes the ordering of low-THC cannabis by doctors licensed under Chapter 458 and Chapter 459 of Florida Statutes for their qualified patients. The rules and regulations pertaining to the medical use of low-THC cannabis were created by the Florida Department of Health. Eligible patients must suffer from cancer or a physical medical condition that chronically produces symptoms of seizures, or severe and persistent muscle spasms, or to alleviate symptoms of such, if no other satisfactory alternative treatment options exist for the patient and other specific requirements have been met.

The law, as amended in 2016, provides for a preemption regarding any regulation of the cultivation and processing of medical cannabis or low-THC cannabis by dispensing organizations and expressly provides that "a municipality may determine by ordinance the criteria for the number and location of, and other permitting requirements that do not conflict with state law or department rule for, dispensing facilities of dispensing organizations located within its municipal boundaries." Essentially, this means that no municipality can prohibit these businesses entirely,

but may adopt reasonable zoning regulations that control the number, location, and establish operational standards that do not conflict with state law.

Planning and Zoning Department Analysis

The City Attorney's Office and Community Development staff have been monitoring the evolution of legislation nationally, in Florida, and in Miami-Dade Country for the last two years. City staff believes now is the time to amend the City's Code to address the recent Low THC cannabis legislation and in anticipation of the upcoming Constitutional Amendment on the November 8, 2016 ballot, which may provide for broader use of Low THC cannabis and Medical Marijuana.

The proposed code changes include amending Chapter 24, Zoning and Land Development Code and Chapter 12, Local Business Tax Receipts (BTR) and Chapter 21, Health Regulations. The new regulations will provide for medical marijuana dispensaries and treatment centers as conditional uses subject to very stringent application, distance separations, and operational standards in the B-2, B-4, and B-5 zoning districts. The review of the Chapter 12 and 21 proposed regulations are beyond the purview of the Planning and Zoning Board's review responsibility since they are not in Chapter 24, but they are summarized below for reference.

The distance separations in the attached maps show three scenarios with a range of separations of dispensaries/treatment centers from sensitive uses (residential, drug/alcohol rehab service, schools, day care facilities, places of worship, and bars/package liquor stores). The purpose of these maps is to determine a reasonable and fair amount of locations that a dispensary/treatment center could establish itself throughout the city, but also maintain an adequate separation from the sensitive uses. Three maps were created showing each scenario: 1) 500 feet from residential and 1,000 feet from all of the other sensitive uses; 2) 500ft from residential and 1,500 feet from all of the other sensitive uses; and 3) 500ft across the board from all the sensitive uses. It was determined that map one (500ft, 1,000ft) provided the appropriate balance between providing a reasonable and fair amount of permitted locations and an adequate separation from sensitive uses. In addition to the separation of dispensaries/treatment centers from sensitive uses, there will also be a separation 2,500ft from other dispensaries/treatment centers.

<u>Zoning Requirements Summary</u>

Chapter 24 Zoning and Land Development Code amendment will provide for Conditional Use criteria for medical marijuana dispensaries and treatment centers to include:

- No detriment created for persons/property;
- Parking demand must be met and traffic/parking study shall be completed;

- Distance separations between any school, day care center, place of worship, drug/alcohol rehab service, bars, lounges, package liquor store, any other medical marijuana treatment center, medical marijuana dispensary or residential zoned property;
- Cannot be within the CRA;
- There shall be no onsite cultivation or processing within the City;
- The centers must provide adequate seating and cannot direct or encourage standing, sitting, or loitering outside of business;
- Shall not allow any queuing of vehicles;
- No drive-thru service will be allowed;
- No on-site consumption will be allowed;
- Hours of operation will be restricted to 7am-7pm Mon-Sat and 12pm-5pm on Sun;
- Any additional condition/safeguard as deemed necessary by the Council.

<u>Business Operation, BTR, and Health Requirements</u>
(Not subject to board review; provided for reference only)

Chapter 12 Local Business Tax Receipts and Regulations and Chapter 21 Health shall provide licensure for medical marijuana dispensaries subject to meeting the below criteria:

- Applications for licensure shall include:
- Name and address of applicant (owners) and managers;
- Statement of whether applicant has ever been denied for application, had a license revoked;
- Proof of ownership/approval of property owner to open the facility;
- Must provide an operating plan with description of products and services, floor plan, security plan, area map of a ¼ mile radius;
- Approval from other City Departments;
- Inspection of premises;
- Full compliance with all requirements.

Requirements for operation shall include:

- No marijuana shall be consumed on the premises;
- No person under the age of 18 (unless qualified by state and accompanied by a parent) is allowed on the premises;
- Name and contact of owners shall be posted conspicuously on the premises;
- Any storage, display, sales, or distribution shall not be visible from the exterior;
- Off-site delivery and sales shall be prohibited;
- The only permitted managers and owners shall be registered;
- The delivery hours and hours of operation;
- The licensed premises shall require with the Zoning Code provisions; and
- Security requirements.

The proposed ordinance is consistent with existing and proposed changes to Florida Law and incorporates those provisions and standards which were successful in Cities across the Country.

Community Development Department Recommendation:

Community Development Department staff recommends **APPROVAL** of the ordinance.

Attachment(s):

- Chapter 24 – Zoning & Land Development Code Medical Marijuana Draft Ordinance.
- 500ft & 1,000ft Distance Separation Map (Staff Recommended Separations).
- 500ft & 1,500ft Distance Separation Map
- 500ft Distance Separation Map

AN ORDINANCE OF THE MAYOR AND CITY COUNCIL AMENDING THE CODE OF THE ORDINANCES OF THE CITY OF NORTH MIAMI BEACH, FLORIDA BY AMENDING CHAPTER XXIV "NORTH MIAMI BEACH ZONING AND LAND DEVELOPMENT CODE", ARTICLE II "DEFINITIONS", SECTION 24-22 "DEFINITIONS", AND ARTICLE V, "ZONING USE DISTRICTS", SECTION 24-52 "B-2 GENERAL BUSINESS DISTRICT", SECTION 24-54 B-4 "DISTRIBUTION BUSINESS AND LIGHT INDUSTRIAL DISTRICT", AND SECTION 24-54.1 "B-5 DISTRIBUTION BUSINESS AND MEDIUM INDUSTRIAL DISTRICT" TO PROVIDE THE CONDITIONS AND REQUIREMENTS FOR THE USE OF MEDICAL MARIJUANA DISPENSARIES, AND MEDICAL MARIJUANA TREATMENT CENTERS; PROVIDING FOR THE REPEAL OF ALL ORDINANCES OR PARTS OF ORDINANCES IN CONFLICT THEREWITH; PROVIDING FOR SEVERABILITY; CODIFICATION; AND FOR AN EFFECTIVE DATE.

DRAFT

WHEREAS, Article VIII, Section 2 of the Florida Constitution, and Chapter 166, *Florida Statutes*, provides municipalities the authority to exercise any power for municipal purposes, except where prohibited by, and to adopt ordinances in furtherance of such authority; and

WHEREAS, Section 381.986(8)(b), *Florida Statutes*, provides that "A municipality may determine by ordinance the criteria for the number and location of, and other permitting requirements that do not conflict with state law or department rule for, dispensing facilities of dispensing organizations located within its municipal boundaries."; and

WHEREAS, on November 8, 2016, Florida voters will be considering the approval of Constitutional Amendment Number 2, *Use of Marijuana for Debilitating Medical Conditions*, which allows for the broader use of medical marijuana for individuals with debilitating medical conditions within the State; and

WHEREAS, significant safety and security concerns have been documented in states where medical marijuana dispensaries ("MMD") and medical marijuana treatment centers ("MMTC") are permitted; and

WHEREAS, MMD and MMTC's are inherently attractive targets for criminals and criminal activity, it is essential for the City to limit the permissible scope and regulate such uses to ensure their compatibility with surrounding businesses, the community, and to protect the public health, safety, and welfare; and

WHEREAS, Conditional Uses are defined as a use, which when specifically listed as such within the use district regulations, may be permitted with certain stipulated conditions that will serve to insure that said use will assimilate properly into its surrounding neighborhood without deleterious effects; and

WHEREAS, the City's Planning and Zoning Board, as the Local Planning Agency, held a duly noticed public hearing on October 26, 2016, and reviewed the proposed amendment for consistency with the City of North Miami Beach's Comprehensive Plan, and recommend approval/denial by a vote of __ to __; and

WHEREAS, the Mayor and City Council find the proposed amendment is consistent with the North Miami Beach Comprehensive Plan and is in the best interests of the City.

NOW, THEREFORE, BE IT ORDAINED by the Mayor and City Council of the City of North Miami Beach, Florida:

DRAFT

Section 1. The foregoing recitals are true and correct.

Section 2. Article II of the City of North Miami Beach Zoning and Land Development Code, entitled "*Definitions*", is amended as follows:

ARTICLE II. DEFINITIONS

Sec. 24-22 Definitions.

* * *

Marijuana has the meaning given cannabis in Section 893.02(3), *Florida Statutes*, as amended and in addition, "Low-THC cannabis" as defined in Section 381.986(1)(e), *Florida Statutes*, as amended, shall also be included in the meaning of the term "marijuana".

* * *

Medical Marijuana Treatment Center means an entity that acquires, cultivates, possesses, processes (including development of related products such as food, tinctures, aerosols, oils, or ointments), transfers, transports, sells, distributes, dispenses, or administers marijuana, products containing marijuana, related supplies, or educational materials to qualifying patients or their personal caregivers and is registered by the Department of Health or its successor agency.

* * *

Medical Marijuana Dispensary means a business that sells or otherwise distributes marijuana through one (1) or more primary caregivers to six (6) or more patients for medical use, along with any cultivation of marijuana associated with such sale or distribution. The term "medical marijuana dispensary" shall not include any person or entity that distributes marijuana for medical use exclusively to five (5) or fewer patients, and shall not include the private possession and medical use of marijuana by an individual patient or caregiver to the extent permitted by any applicable state of Florida law or regulation.

* * *

Section 3. Article V of the City of North Miami Beach Zoning and Land Development Code, entitled "*Zoning Use Districts*", is amended as follows:

Sec. 24-52 B-2 General Business District.

* * *

(C) *Uses Permitted Conditionally.*

* * *

(17) Medical Marijuana Dispensaries/Medical Marijuana Treatment Centers. When considering an application for pain management clinics and medical marijuana dispensaries/medical marijuana treatment centers the approving body must consider the conditional use criteria listed below, in addition to that criteria listed in Section 24-175 *Conditional Uses*. The approving body may deny the request, approve the request, or approve the request subject to conditions. The approving body may assign additional conditions and safeguards as deemed necessary:

a. Whether the request will cause damage, hazard, nuisance or other detriment to persons or property.

b. Any parking demand created by a medical marijuana dispensary/medical marijuana treatment center shall not exceed the parking spaces located or allocated on site, as required by the City's parking regulations. An applicant shall be required to demonstrate, with a current traffic and parking study prepared by a certified professional, that on-site traffic and parking attributable to the medical marijuana dispensary/medical marijuana treatment center will be sufficient to accommodate the traffic and parking demands generated by the medical marijuana dispensary/medical marijuana treatment center.

c. No medical marijuana dispensary/medical marijuana treatment center shall be located within five hundred (500) feet of any residentially zoned property, as further defined herein. No medical marijuana dispensary/medical marijuana treatment center shall be located within one thousand (1,000) feet of any school, day care center, place of worship, drug/alcohol rehabilitation service, bars, lounges, or package liquor stores, as further defined herein. No medical marijuana dispensary/medical marijuana treatment center shall be located within twenty-five hundred (2,500) feet of any other medical marijuana dispensary/medical marijuana treatment center as defined herein. Distances shall be measured by drawing a straight between the closest point of the medical marijuana dispensary/medical marijuana treatment center structure to the closest property line of edge of leased space, whichever is closer, of the school, day care center, place of worship, residentially zoned property, or other medical marijuana dispensary/medical marijuana treatment center.

d. Medical Marijuana dispensaries/medical marijuana treatment centers shall not be permitted within the legal boundaries defined as the Community Redevelopment Agency (CRA) for the City of North Miami Beach.

e. Medical marijuana dispensaries/medical marijuana treatment centers shall ensure that there is no queuing of vehicles in the rights-of-way.

f. No medical marijuana dispensaries/medical marijuana treatment centers shall have a drive-through or drive service aisle.

g. Medical marijuana dispensaries/medical marijuana treatment centers shall be appear before the City Council for annual progress reports prior to the issuance of business tax receipts and/or renewals.

h. Medical marijuana dispensaries/medical marijuana treatment centers shall, at all times, be in compliance with federal and state regulations, Miami-Dade County Code of Ordinances, and the City of North Miami Beach Code of Ordinances, as may be amended.

* * *

Section 4. Article V of the City of North Miami Beach Zoning and Land Development Code, entitled "*Zoning Use Districts*", is amended as follows:

Sec. 24-54 B-4 Distribution Business and Light Industrial District.

* * *

(C) *Uses Permitted Conditionally.*

* * *

(11) Medical Marijuana Dispensaries/Medical Marijuana Treatment Centers. When considering an application for medical marijuana dispensaries/medical marijuana treatment centers the approving body must consider the conditional use criteria listed in Section 24-52 B-2 *General Business District*, in addition to that criteria listed in Section 24-175 *Conditional Uses*. The approving body may deny the request, approve the request, or approve the request subject to conditions. The approving body may assign additional conditions and safeguards as deemed necessary.

* * *

Section 5. Article V of the City of North Miami Beach Zoning and Land Development Code, entitled "*Zoning Use Districts*", is amended as follows:

Sec. 24-54.1 B-5 Distribution Business and Medium Industrial District.

* * *

(C) *Uses Permitted Conditionally.*

* * *

(11) Medical Marijuana Dispensaries/Medical Marijuana Treatment Centers. When considering an application for medical marijuana dispensaries/medical marijuana treatment centers the approving body must consider the conditional use criteria listed in Section 24-52 B-2 *General Business District*, in addition to that criteria listed in Section 24-175 *Conditional Uses*. The approving body may deny the request, approve the request, or approve the request subject to conditions. The approving body may assign additional conditions and safeguards as deemed necessary.

* * *

Section 6. The Director of Community Development is hereby directed to make all necessary changes to the City of North Miami Beach Zoning and Land Development Code to implement the intent of this Ordinance.

Section 7. All ordinances or parts of ordinances in conflict therewith be and the same are hereby repealed.

Section 8. If any section, subsection, clause or provision of this Ordinance is held invalid, the reminder shall not be affected by such invalidity.

Section 9. It is the intention of the City of North Miami Beach and it is hereby ordained that the provisions of this Ordinance shall become and be made a part of the Code of Ordinances of the City of North Miami Beach, Florida. The Sections of this Ordinance may be renumbered or relettered to accomplish this intention and the word Ordinance" may be changed to "Section", "Article", or other appropriate word as the Codifier may deem fit.

[SIGNATURE PAGE TO FOLLOW]

DRAFT

APPROVED on first reading this ____ day of _____, 2016.

APPROVED AND ADOPTED on second reading this ____ day of _____, 2016.

ATTEST:

_____
PAMELA L. LATIMORE
CITY CLERK

(CITY SEAL)

_____
GEORGE VALLEJO
MAYOR

APPROVED AS TO FORM, LANGUAGE
AND FOR EXECUTION:

_____
JOSÉ SMITH
CITY ATTORNEY

DRAFT

Sponsored by: Mayor and City Council.
Note: Proposed additions to existing City Code text are indicated by underline.

500 FT SEPARATION FOR MEDICAL MARIJUANA DISPENSARIES CITY OF NORTH MIAMI BEACH

MIAMI-DADE COUNTY, FLORIDA

TOWNSHIP 52 SOUTH, 41 TO 42 EAST

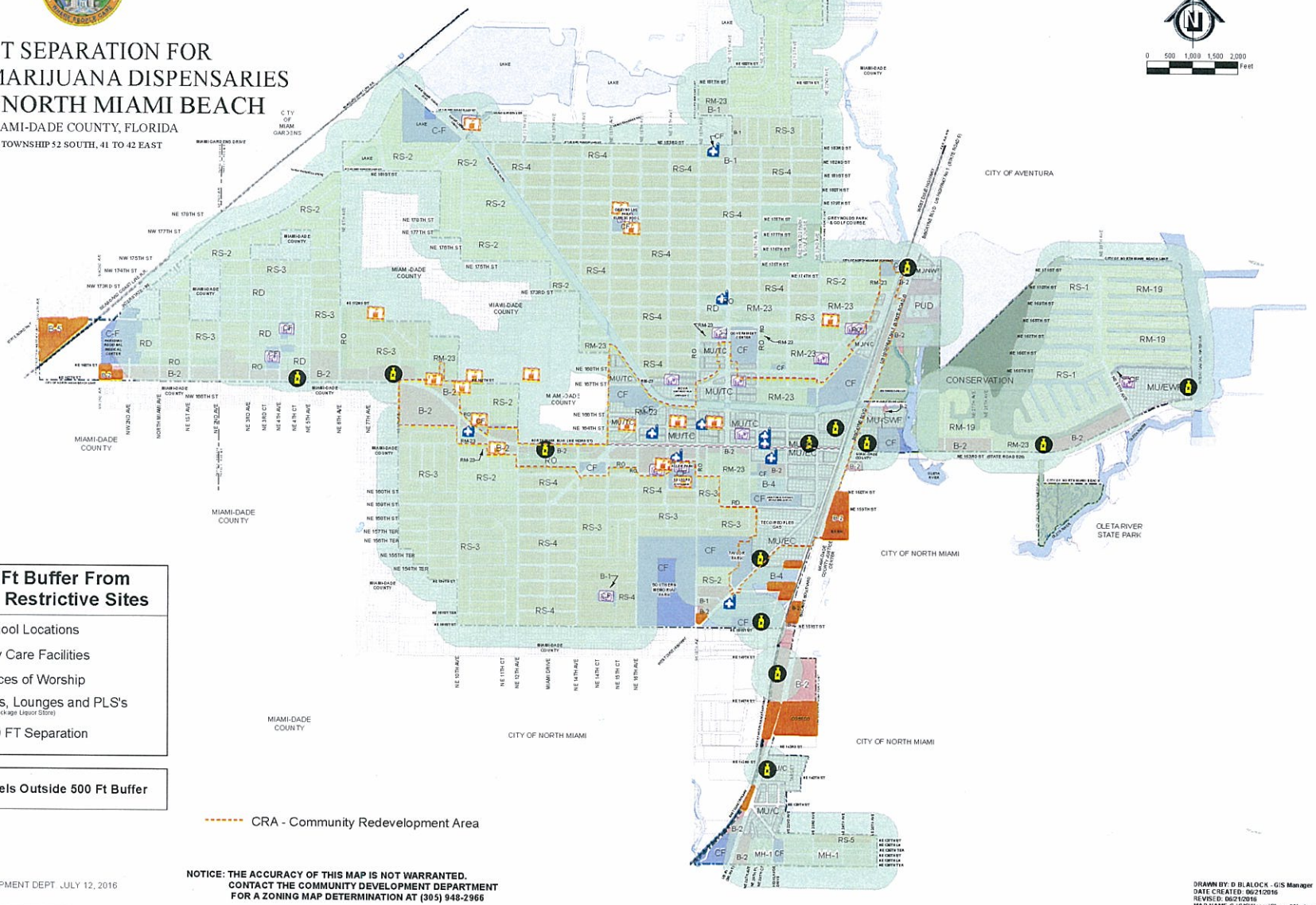

500 Ft Buffer From These Restrictive Sites

- School Locations
- Day Care Facilities
- Places of Worship
- Bars, Lounges and PLS's (Package Liquor Store)
- 500 FT Separation

Parcels Outside 500 Ft Buffer

CRA - Community Redevelopment Area

NOTICE: THE ACCURACY OF THIS MAP IS NOT WARRANTED. CONTACT THE COMMUNITY DEVELOPMENT DEPARTMENT FOR A ZONING MAP DETERMINATION AT (305) 948-2966

REVISED BY: COMMUNITY DEVELOPMENT DEPT. JULY 12, 2016
MAP REPRINTED: JULY 12, 2016

DRAWN BY: D. BLALOCK - GIS Manager
DATE CREATED: 06/21/2016
REVISED: 06/21/2016
MAP NAME: C:\GIS\Users\SharedWorkspace\Projects\CommDev\Medical\MJZoning\20160713 500RES_Schools.mxd

500 FT RESIDENTIAL AND 1000 FT RESTRICTIVE SITE SEPARATION FOR MEDICAL MARIJUANA DISPENSARIES

CITY OF NORTH MIAMI BEACH

MIAMI-DADE COUNTY, FLORIDA

TOWNSHIP 52 SOUTH, 41 TO 42 EAST

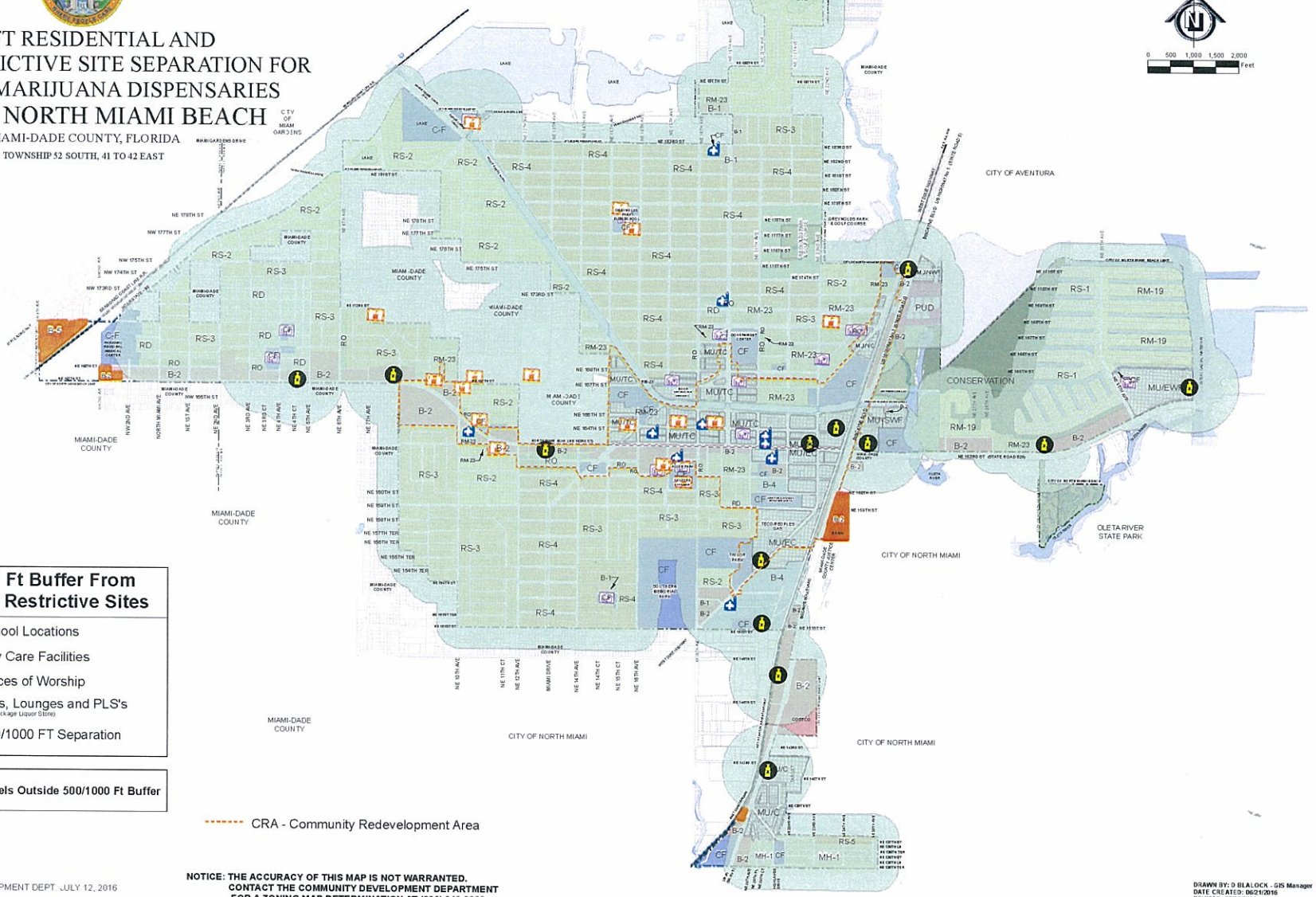

1000 Ft Buffer From These Restrictive Sites

- School Locations
- Day Care Facilities
- Places of Worship
- Bars, Lounges and PLS's (Package Liquor Store)
- 500/1000 FT Separation

Parcels Outside 500/1000 Ft Buffer

CRA - Community Redevelopment Area

NOTICE: THE ACCURACY OF THIS MAP IS NOT WARRANTED. CONTACT THE COMMUNITY DEVELOPMENT DEPARTMENT FOR A ZONING MAP DETERMINATION AT (305) 948-2966

REVISED BY: COMMUNITY DEVELOPMENT DEPT. JULY 12, 2016
MAP REPRINTED: JULY 12, 2016

DRAWN BY: D BLALOCK - GIS Manager
DATE CREATED: 06/21/2016
REVISED: 07/26/2016
MAP NAME: C:\GIS\Users\Shared\Workspace\Projects\ComDev\Medical MJ\Zoning 20160726-500RES_1000Rest.mxd

500 FT RESIDENTIAL AND 1500 FT RESTRICTIVE SITE SEPARATION FOR MEDICAL MARIJUANA DISPENSARIES

CITY OF NORTH MIAMI BEACH

MIAMI-DADE COUNTY, FLORIDA

TOWNSHIP 52 SOUTH, 41 TO 42 EAST

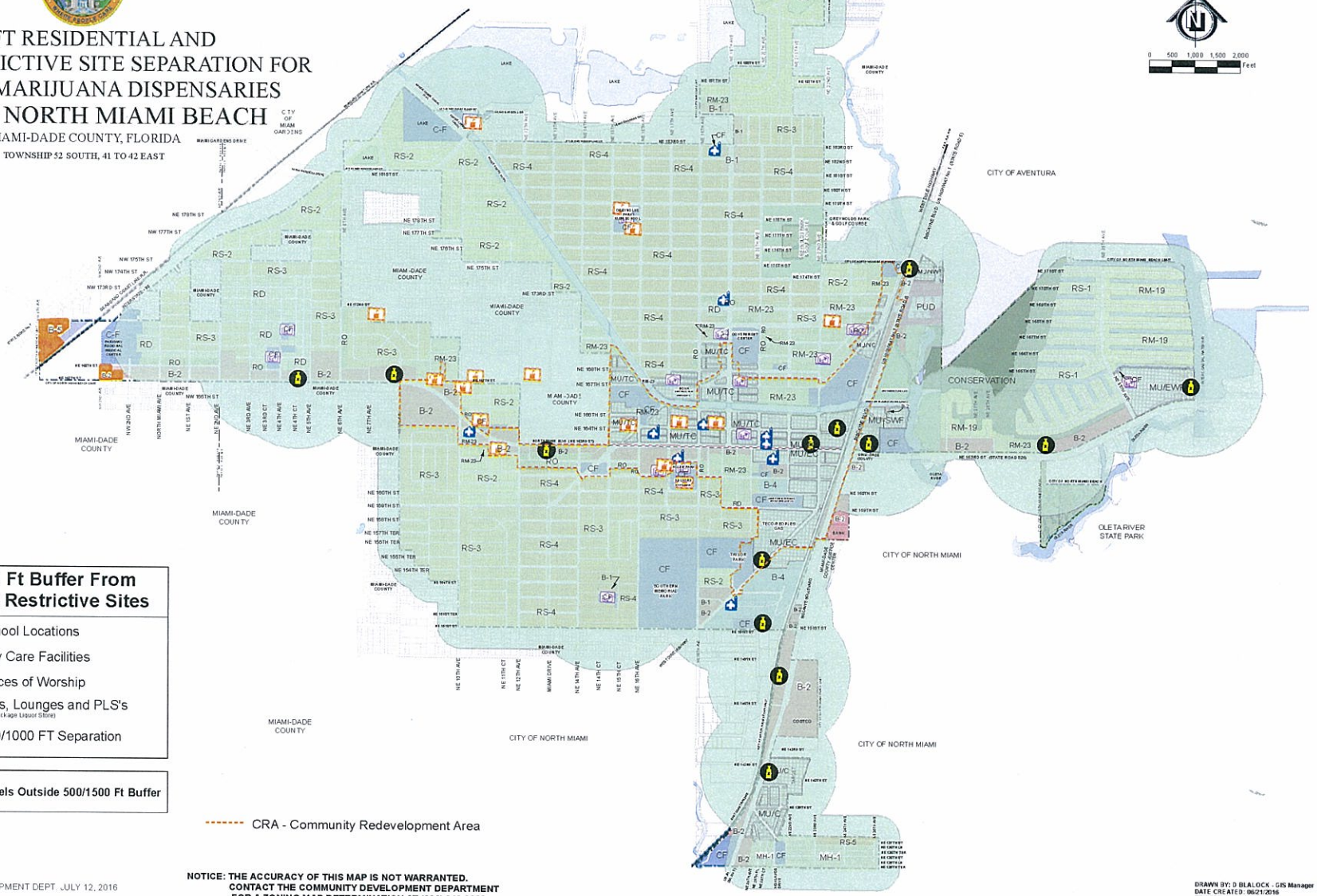

1500 Ft Buffer From These Restrictive Sites

- School Locations
- Day Care Facilities
- Places of Worship
- Bars, Lounges and PLS's (Package Liquor Store)
- 500/1000 FT Separation

Parcels Outside 500/1500 Ft Buffer

CRA - Community Redevelopment Area

NOTICE: THE ACCURACY OF THIS MAP IS NOT WARRANTED. CONTACT THE COMMUNITY DEVELOPMENT DEPARTMENT FOR A ZONING MAP DETERMINATION AT (305) 948-2966

REVISED BY: COMMUNITY DEVELOPMENT DEPT. JULY 12, 2016
MAP REPRINTED: JULY 12, 2016

DRAWN BY: D BLALOCK - GIS Manager
DATE CREATED: 06/21/2016
REVISED: 07/26/2016
MAP NAME: C:\GIS\Users\Shared\Workspace\Projects\CommDev\MedicalMJZoning20160726-500RES_1500Rest.mxd

Item 16-22

Fence Height Ordinance

PLANNING & ZONING BOARD
STAFF REPORT

TO: Planning & Zoning Board Members

FROM: Richard G. Lorber, AICP, Director of Community Development

DATE: October 26, 2016

RE: Ordinance: Zoning Text Amendment – Fence Heights

AN ORDINANCE OF THE MAYOR AND CITY COUNCIL AMENDING CHAPTER XXIV, OF THE CODE OF THE ORDINANCES OF THE CITY OF NORTH MIAMI BEACH, FLORIDA BY AMENDING ARTICLE VIII, "SUPPLEMENTAL REGULATIONS" SECTION 24-80 "FENCES, WALLS AND HEDGES", TO SPECIFY THAT HEIGHTS OF ELEVATION OF WALLS OR FENCES SHALL BE MEASURED FROM ADJACENT GRADE; PROVIDING FOR THE REPEAL OF ALL ORDINANCES OR PARTS OF ORDINANCES IN CONFLICT THEREWITH; PROVIDING FOR SEVERABILITY; CODIFICATION; AND FOR AN EFFECTIVE DATE.

Request:
The applicant, City of North Miami Beach, proposes a text amendment to Section 24-80 of the North Miami Beach City Code, in order to specify that the height of walls and fences permitted shall be measured from adjacent grade.

Background:
The City's fence height regulations have been in place for many years, and have resulted in the built pattern of fences existing in all of the City's various neighborhoods. Those regulations permitted the height of fences for single-family homes to be four (4) feet high in the front yard area, and six (6) feet high in the side and rear yard areas. This is very standard and is similar to many other local municipalities. As per the older regulations, the height of fences was specified to be measured from the finished floor elevation of the home.

In recent years, as the minimum flood elevation for new construction has been raised, primarily in the low-lying Eastern Shores neighborhood, houses have been getting higher, and consequently a concern was raised about measuring fence heights from finished floor elevation. The Planning & Zoning Division brought forward an amendment to address this phenomena, having seen a proposal for an abnormally tall front yard wall, which would have met the code because it was measured from a very tall finished floor elevation. The amendment was adopted primarily to address compatibility concerns in the RS-1 (Eastern Shores) single-family residential district.

Staff had recommended measuring from "adjacent grade", which is the standard for measurement in most other municipalities. However, the Planning & Zoning Board recommended measuring from "crown of road", and the ordinance was processed and adopted with the crown of road language.

Ordinance No. 2015-2 was adopted on January 20, 2015 providing that the heights of elevation of any wall or fence shall be measured from the "crown of the road".

Planning and Zoning Department Analysis:
Unfortunately, the adopted amendment has resulted in unexpected problematic consequences in other single-family residential districts in the City. While it is OK for areas like Eastern Shores, which are basically flat, in other areas of the City that have more significant contours and terrain, the provision to measure from crown of road becomes unworkable. Application of the crown of road standard would result in incompatible fence heights and numerous non-conforming fences in many of the single-family districts.

In certain cases, for example in the Skylake neighborhood, homes actually slope up from the street two or three feet, to the elevation of the home. In the rear, many of the backyards slope back down again to the shore of the lake. These significant grade differences make it impossible to construct a reasonably high privacy fence between two homes under the crown of road standard. A literal reading of this provision as applied to properties with hills or grade differentials would mean that the fence separating the two houses would stand only about three feet high from the adjacent properties on each side, rendering the privacy fence useless and superfluous. This is why the great majority of zoning codes measure fence height from adjacent grade, and why adopting crown of the road for measuring the height of side and rear fences was an unintended mistake.

Staff has prepared the subject ordinance to correct this problem that was created with the 2015 amendment. Staff proposes measuring height of fences from adjacent grade, which is still an improvement from the previous provision measuring from finished floor elevation, but would avoid problems like these with properties that vary in elevation.

A temporary moratorium to suspend enforcement and preserve the status quo during the planning process was adopted by the Mayor and Council on October 4, 2016 in order to ensure the problematic consequences are not exacerbated. The temporary moratorium on the enforcement of fence height regulations in single-family neighborhoods will automatically dissolve upon the adoption of this amendment to the North Miami Beach Zoning and Land Development Code, or by April 4, 2017, whichever comes first.

Community Development Department Recommendation:
Community Development Department staff recommends approval of the subject amending ordinance.

ORDINANCE NO. 2016-XX

AN ORDINANCE OF THE MAYOR AND CITY COUNCIL AMENDING CHAPTER XXIV, OF THE CODE OF THE ORDINANCES OF THE CITY OF NORTH MIAMI BEACH, FLORIDA BY AMENDING ARTICLE VIII, "SUPPLEMENTAL REGULATIONS" SECTION 24-80 "FENCES, WALLS AND HEDGES", TO SPECIFY THAT HEIGHTS OF ELEVATION OF WALLS OR FENCES SHALL BE MEASURED FROM ADJACENT GRADE; PROVIDING FOR THE REPEAL OF ALL ORDINANCES OR PARTS OF ORDINANCES IN CONFLICT THEREWITH; PROVIDING FOR SEVERABILITY; CODIFICATION; AND FOR AN EFFECTIVE DATE.

WHEREAS, Section 24-80 of the North Miami Beach Zoning and Land Development Code ("City Code") specifies the maximum height permitted for perimeter fences and walls to be four (4) feet in the front setback, and six (6) feet high for the side and rear setbacks; and

WHEREAS, Section 24-80 (C)(3)(a) specifies the manner in which the fence or wall height shall be measured; and

WHEREAS, On January 20, 2015, the City Council of the City of North Miami Beach ("City") amended Section 24-80 Fences, Walls, and Hedges in Ordinance No. 2015-2, to provide, in part, that the heights of elevation of any wall or fence shall be measured from the "crown of the road"; and

WHEREAS, the adopted amendment has resulted in unexpected problematic consequences in those single-family residential districts in the City that have hills or grade differentials, resulting in incompatible fence heights and numerous non-conforming fences; and

WHEREAS, staff has prepared this ordinance in order to address compatibility concerns, consistency with surrounding neighborhoods, and to standardize how fences and walls are measured; and

WHEREAS, the City's Planning and Zoning Board, as the Local Planning Agency, held a duly noticed public hearing on _____, 2016, and reviewed the proposed amendment for consistency with the City of North Miami Beach's Comprehensive Plan, and recommend _____ by a vote of __ to __; and

WHEREAS, the City Council believes the proposed amendment is consistent with the North Miami Beach Comprehensive Plan and is in the best interests of the City.

NOW, THEREFORE, BE IT ORDAINED by the City Council of the City of North Miami Beach, Florida:

Section 1. The foregoing "Whereas" clauses are hereby ratified and incorporated as the legislative intent of this Ordinance.

Section 2. Article VIII of the City of North Miami Beach Zoning and Land Development Code, entitled Supplemental Regulations, is amended as follows:

Sec. 24-80 - Fences, Walls and Hedges.

(A) *Requirements.*

(1) Equipment screening: All outdoor washers, dryers or refrigerators and all trash compactors shall be screened by a six (6) foot fence or wall with a gate, except as restricted by (C)(3) below.

(2) Commercial screen adjacent to residential: A six (6) foot high solid masonry wall shall be required along all side and rear commercial or industrial property lines which are contiguous to a residentially zoned property, subject to vision clearance requirements established elsewhere in this section.

(3) Outdoor storage: All permitted outdoor commercial storage areas shall be visually screened from public view by a six (6) foot high solid wood or masonry fence or wall.

(4) Salvage yard: All salvage yards shall be visually screened from public view by an eight (8) foot high solid masonry wall, which shall be without openings, except entrance and exit. Such openings shall be equipped with gates forming an opaque visual obstruction.

(5) Tennis court: A ten (10) foot high chain link fence may enclose any permitted tennis court facility, subject to required yard setbacks.

(6) Design: All fences and walls shall be finished on both sides and be harmonious in color, type and material with adjacent architecture and lots.

(B) *Prohibitions.*

(1) No fence, wall or hedge may be constructed, installed or maintained which in any manner creates a visual obstruction to vehicular traffic or conflicts with the requirements of Section 24-82 herein.

(2) No fence or wall may be constructed, installed or maintained which includes barbed wire, broken glass, electrical elements, or other hazardous materials, except in the case of a business-zoned property where outdoor storage is authorized, a one (1) foot high nonelectrified barbed wire extension may be allowed atop a permitted fence or wall.

(3) No solid fence or wall which does not allow air and light to freely pass through may be constructed, installed or maintained in Blocks 1 through 6 and 9 through 28, including Buffer Extensions (Tracts 1, 2 and 3) lying north and adjacent to Blocks 1, 2 and 9, of TRAILER CITY SUBDIVISION as recorded in Plat Book 46, at page 60, of the Public Records of Miami-Dade County, Florida.

(C) *General Requirements.*

(1) *Construction and materials:*

(a) All fences and walls shall comply with the Florida Building Code, as amended.

(b) No fence or wall may be constructed of materials which will be hazardous to the health, safety, or welfare of persons or animals.

(2) *Maintenance:* All fences, walls and hedges shall be maintained in a safe, attractive and nonhazardous condition. Walls and fences, unless of natural materials or galvanized, shall be properly painted.

(3) *Maximum height:*

(a) RS-1, RS-2, RS-3, RS-4, RS-5, MH-1, RD, and RO Zoning Districts: No fence or wall shall exceed six (6) feet in height within a required rear, corner side, and interior side yard, or four (4) feet in height within a required front yard. Pedestrian and vehicular gates may be increased by one (1) additional foot for decorative features. Any questions as to such heights may be conclusively determined by a registered civil engineer, a registered land surveyor or an architect at the applicants cost. Fences around tennis courts will be permitted to a height of ten (10) feet. Solid waterfront walls and fences shall not be permitted in excess of three (3) feet in height. The heights of elevation of any wall or fence under this section shall be measured from adjacent grade ~~the crown of the road~~.

(b) RM-19 Zoning District: See Section 24-47(D)(e).

(c) RM-23, RM-32, and FCC Zoning Districts: No fence or wall shall exceed six (6) feet in height. Pedestrian and vehicular gates may be increased by one (1) additional foot for decorative features.

(d) Under all circumstances, in all residential districts the six-foot height of any fence or wall shall not begin prior to the front building line.

(e) In all nonresidential districts, no fence, wall or hedge shall exceed six (6) feet in height, except as may be permitted or further restricted elsewhere in this section.

(4) *Hedges:*

(a) In all commercial and multifamily zoning districts no hedge shall exceed the allowable height of a fence or wall in its corresponding yard.

(b) In the RS-1, RS-2, RS-3, RS-4, RS-5, MH-1, RD, and RO Zoning Districts hedges shall be limited to four (4) feet in the required front yard and eight (8) feet in the required rear, interior side, and corner side yards.

(c) Under all circumstances, in the RS-1, RS-2, RS-3, RS-4, RS-5, MH-1, RD, and RO Zoning Districts, the eight (8) foot height of any hedge shall not begin prior to the front building line.

Section 3. The Director of Community Development is hereby directed to make all necessary changes to the City of North Miami Beach Zoning and Land Development Code to implement the intent of this Ordinance.

Section 4. All ordinances or parts of ordinances in conflict therewith be and the same are hereby repealed.

Section 5. If any section, subsection, clause or provision of this Ordinance is held invalid, the reminder shall not be affected by such invalidity.

Section 6. It is the intention of the City of North Miami Beach and it is hereby ordained that the provisions of this Ordinance shall become and be made a part of the Code of Ordinances of the City of North Miami Beach, Florida. The Sections of this Ordinance may be renumbered or

relettered to accomplish this intention and the word Ordinance" may be changed to "Section", "Article", or other appropriate word as the Codifier may deem fit.

Section 7. This Ordinance shall become effective ten days after adoption on second reading.

APPROVED BY TITLE ONLY on first reading this ____ day of _____, 2016.

APPROVED AND ADOPTED on second reading this ____ day of _____, 2016.

[SIGNATURE PAGE TO FOLLOW]

ATTEST:

_____
PAMELA L. LATIMORE
CITY CLERK

(CITY SEAL)

_____
GEORGE VALLEJO
MAYOR

APPROVED AS TO FORM, LANGUAGE
AND FOR EXECUTION

_____
JOSÉ SMITH
CITY ATTORNEY

Sponsored by: Mayor and Council

Note: Proposed additions to existing City Code text are indicated by underline.